Earth-Sun System Technology Conference

June 28-30, 2005

High Efficiency L-band T/R Module: Development Results

Sponsored by the
Advanced Component Technology (ACT) Program

Wendy N. Edelstein (JPL)
Constantine Andricos (JPL)
David Rutledge (Caltech)
Feiyu Wang (Caltech)

High Efficiency L-band T/R Module: Development Results

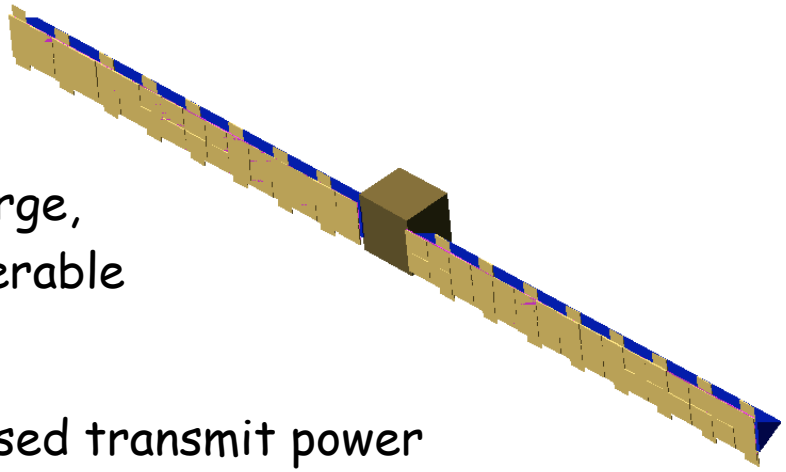

Motivation

- NASA spaceborne SAR missions require large, lightweight, high power, electronically-steerable L-band phased-array antennas.
- High efficiency T/R modules enable increased transmit power or better use of limited resources.

Applications

- ***L-band Interferometric SAR*** for measurement of surface deformation and surface strain accumulation due to seismic and volcanic activity, and natural and manmade hazard monitoring, assessment and disaster response
- ***L-band Polarimetric SAR*** for measurement of soil moisture, biomass, land cover change, ice sheet motion

High Efficiency L-band T/R Module: Development Results

Objectives

Develop a high-power (>30W), high-efficiency (>70%), broadband (>80MHz) L-band (1250 MHz) T/R module for use in SAR antennas.

Approach

Investigate GaAs Class-A/B power amplifiers and LDMOS Class-E/F power amplifiers for use in high-efficiency T/R modules.

- Develop a product line of high-efficiency PAs (30W, 70W) for use in the L-band T/R module
- Develop a common 3W T/R driver
- Integrate the PA with the 3W T/R driver

L-band T/R module block diagram

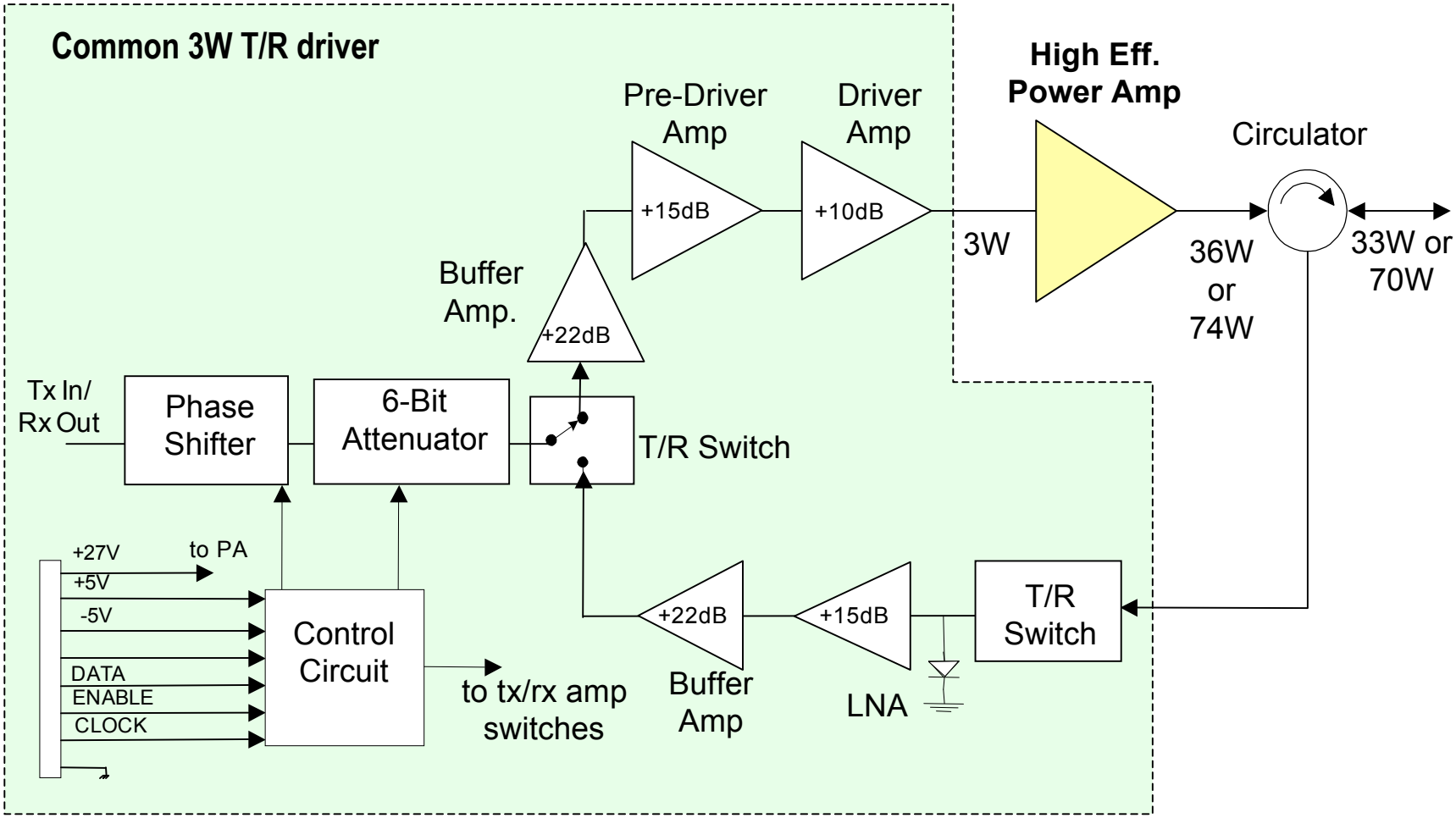

High Efficiency L-band T/R Module: Development Results

30 Watt GaAs Class-A/B Amplifier Simplified Schematic

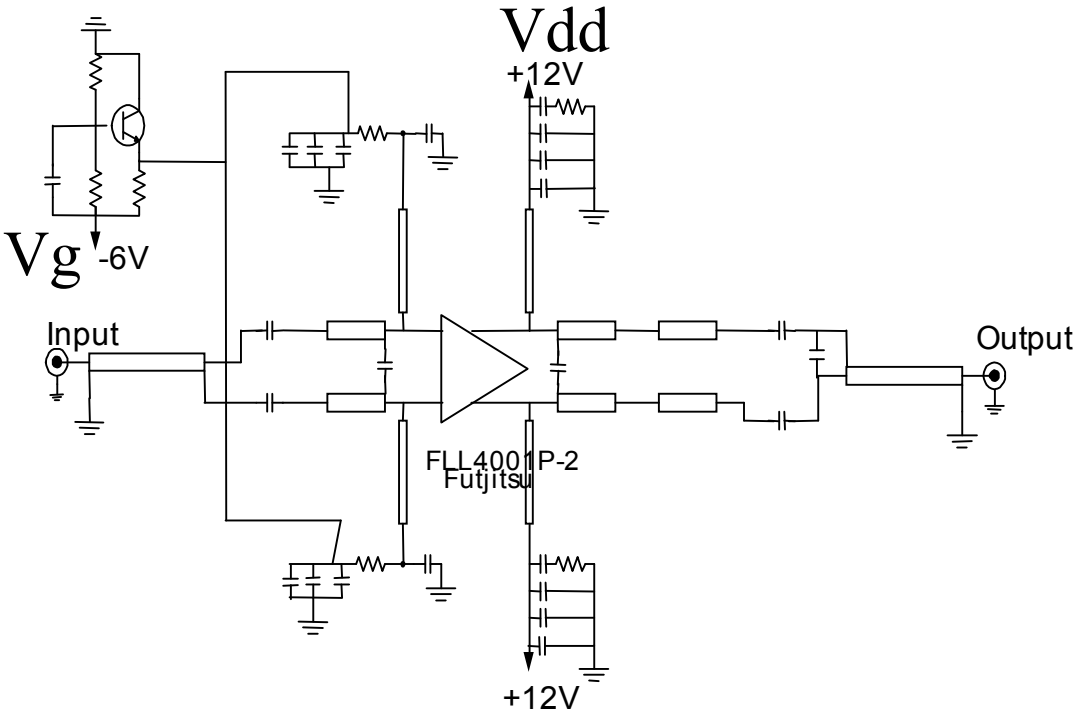

Assembled Class-A/B Power Amplifier

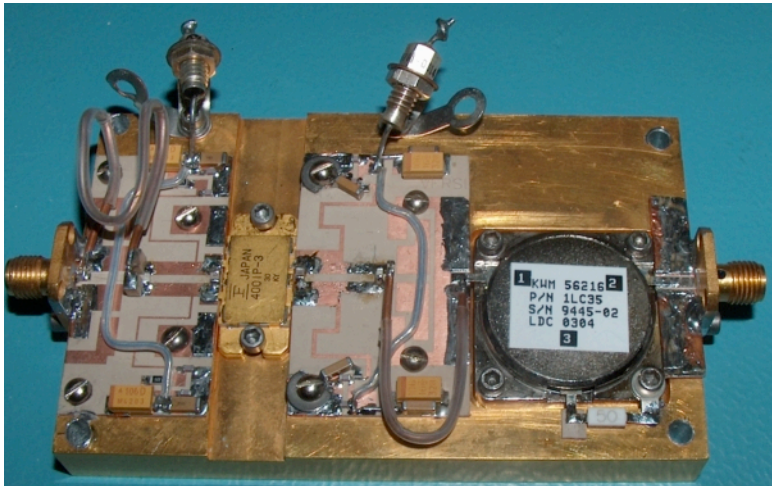

High Efficiency L-band T/R Module: Development Results

Power Output vs. Frequency of Class-A/B PA with Circulator

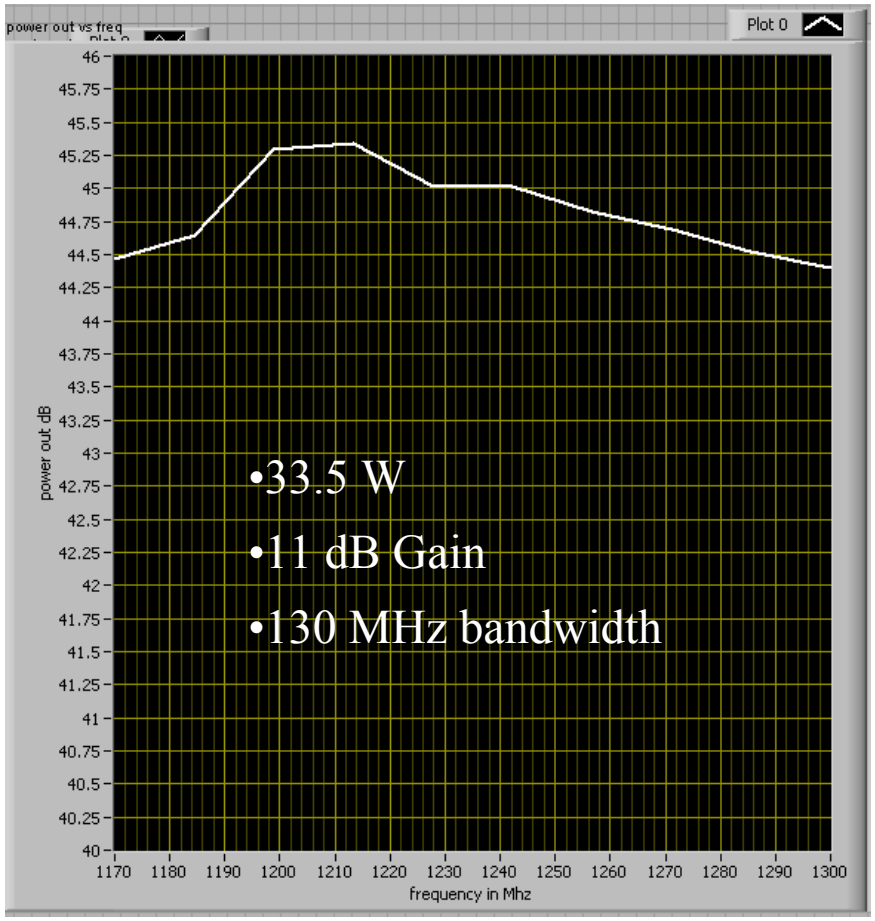

Drain Efficiency vs. Frequency of Class-A/B PA with Circulator

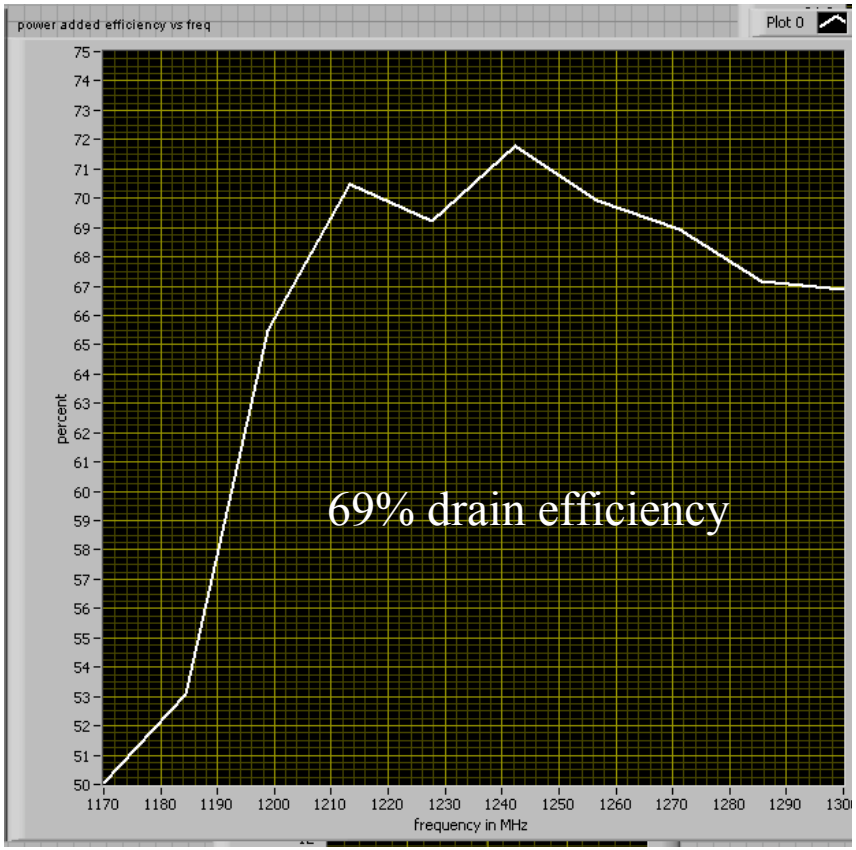

Push-Pull Class-E/F Power Amplifier

- There are different classes of switching amplifiers
  - Class D, Class E, and Class F
- Class-E/F amplifiers combines advantages of class-E and class-F amplifiers
  - The self-inductance of output balun and the device output capacitance form a resonance at the fundamental frequency.
  - Higher operating frequency
  - Uses symmetry for harmonic tuning
  - Higher efficiency and output power
  - Low peak voltage and RMS current
  - Simple and compact

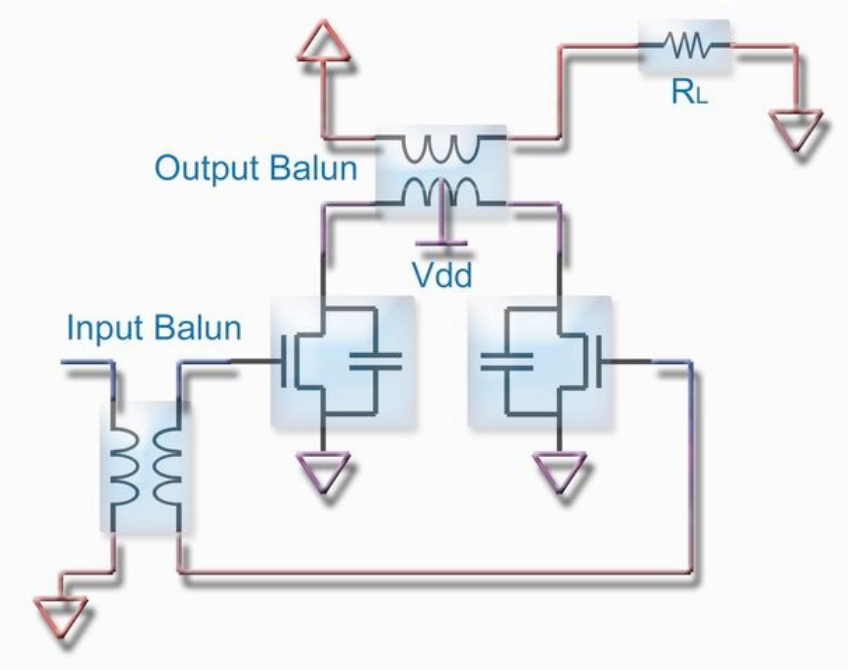

Input & Output Balun

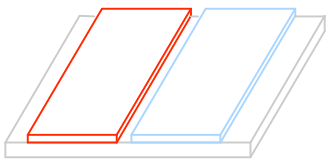

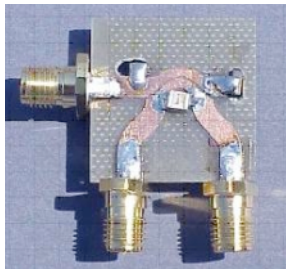

Microstrip Balun

- Low coupling coefficient (k ~ 0.35)
- Insufficient coupling to realize an amplifier.

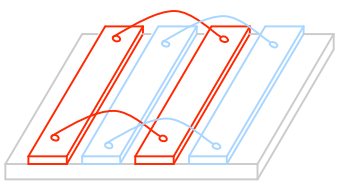

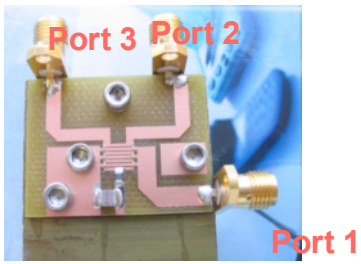

Interdigital Balun

- Improved coupling coefficient (k ~ 0.5)
- Inductance limited operating frequency

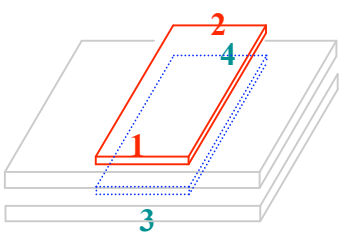

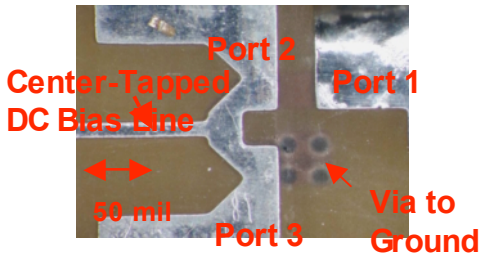

Broadside-Coupling Microstrip Balun

- High coupling coefficient (k~0.75)
- Compact layout with reduced inductance
- Good balance in magnitude and phase

LD-MOS Class-E/F Power Amplifier

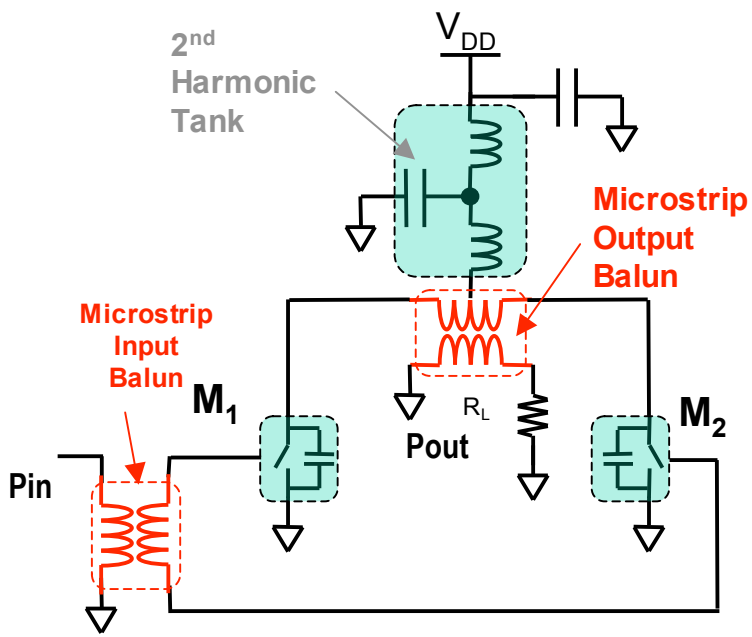

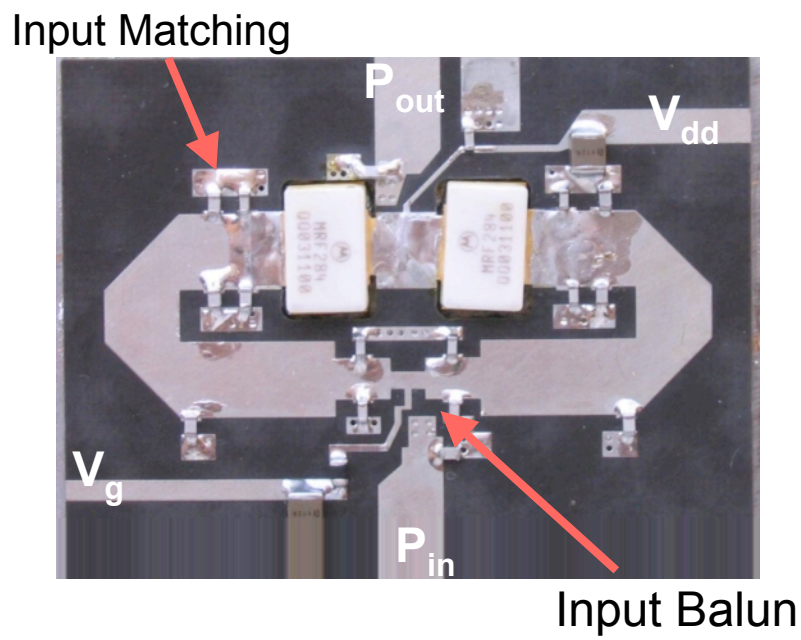

Simplified schematic and photograph of the LDMOS Push-Pull Class-E/F power amplifier with broadside coupling balun.

Class-E/F Amplifier Performance (1)

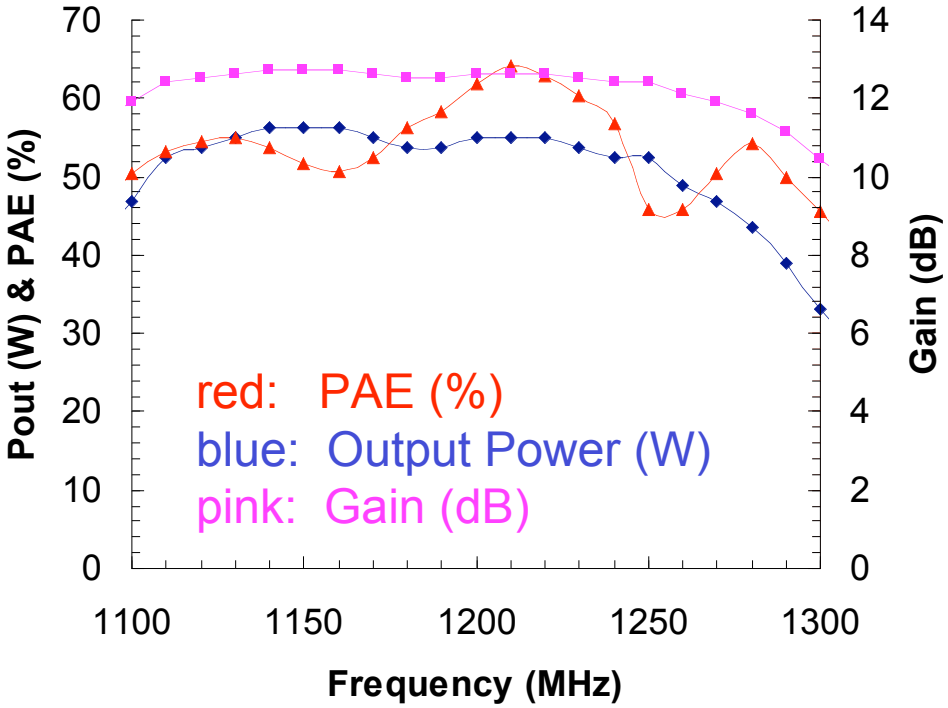

Input Power (3W) Peak PAE: 65% Peak Power: 56 W
At least 33W output power from 1080 MHz to 1300 MHz
1 dB bandwidth: 1100 – 1270 MHz

Class-E/F Amplifier Performance (2)

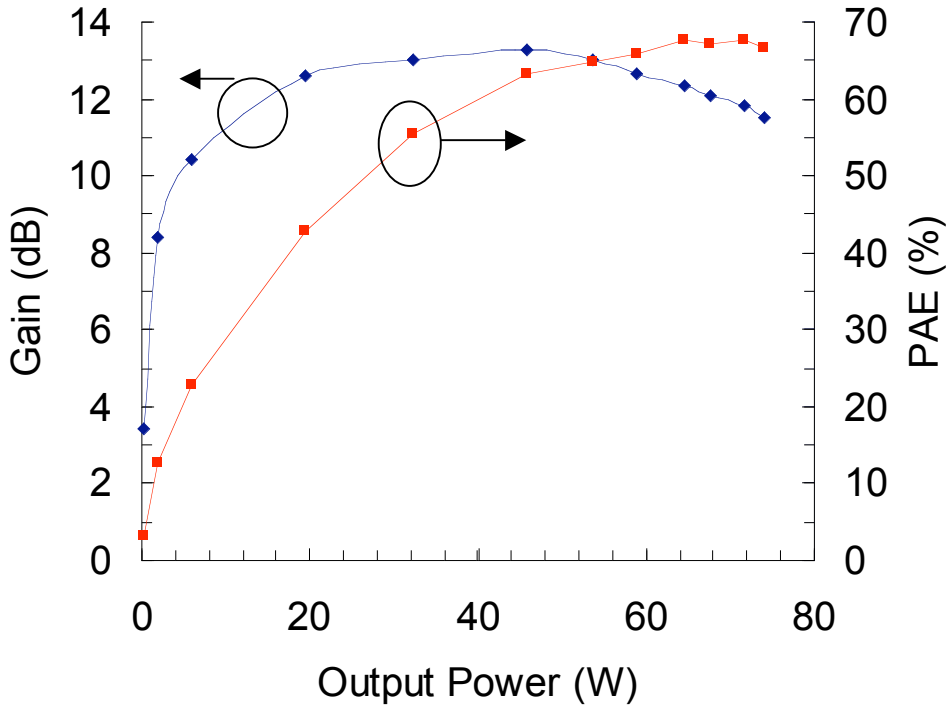

At 1210 MHz, Drain Bias 30V, and Gate Bias 3V
Peak PAE is 67%
Peak Output Power is 74W

LD-MOS Class-E/F PA Progress

	Phase I Amplifier (Measured)	Phase II Amplifier (Measured)	Phase III Amplifier (Measured)
Output Power	35 W	60W	74W
Frequency	1210 MHz	1100 MHz	1220 MHz
Gain	> 10 dB	> 11 dB	>12 dB
Drain Efficiency	70%	70%	72%
PAE	62%	65%	67%
Bandwidth	80 MHz (3dB)	> 150 MHz (3dB)	> 170 MHz (1dB)

Performance Comparison

	This Work (Caltech)	Long *et al.* (UCSB)	Le Gallou *et al.* (Alcatel)	Adahl *et al.* (Chalmers)
Power	74 W	13 W	10 W	10 W
Gain	12 dB	14 dB	13 dB	13 dB
PAE	67%	58%	66%	66%
1-dB BW	170 MHz	N/A	>50 MHz (3dB)	50 MHz (3dB)
Class	Class $E/F_{odd,2}$	Class D^{-1}	Class F^{-1}	Class E
Freq	1.22 GHz	1.0 GHz	1.5 GHz	1.0 GHz
Device	Motorola Si LDMOS MRF 284	Ericsson Si LDMOS PTF 10135	UMS Custom GaAs HBT	Motorola Si LDMOS MRF 282
Size	5 cm x 3.5 cm	6 cm x 20 cm	N/A	10 cm x 10 cm

Integrated T/R Modules

Module # 1
(w/ 30W Class-A/B PA)

Module # 2
(w/ 70W Class-E/F PA)

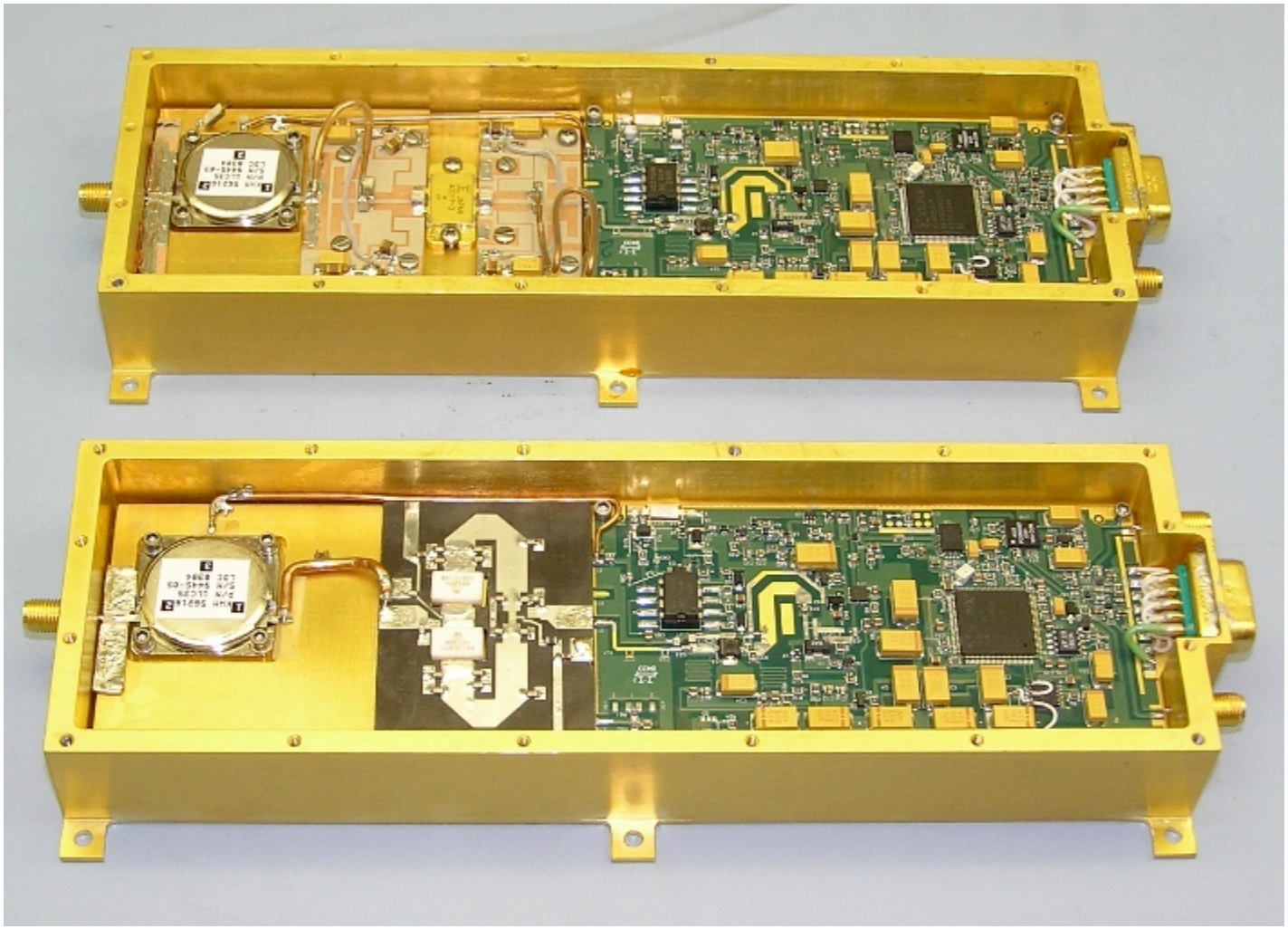

Integrated T/R Module: Common 3W T/R Driver

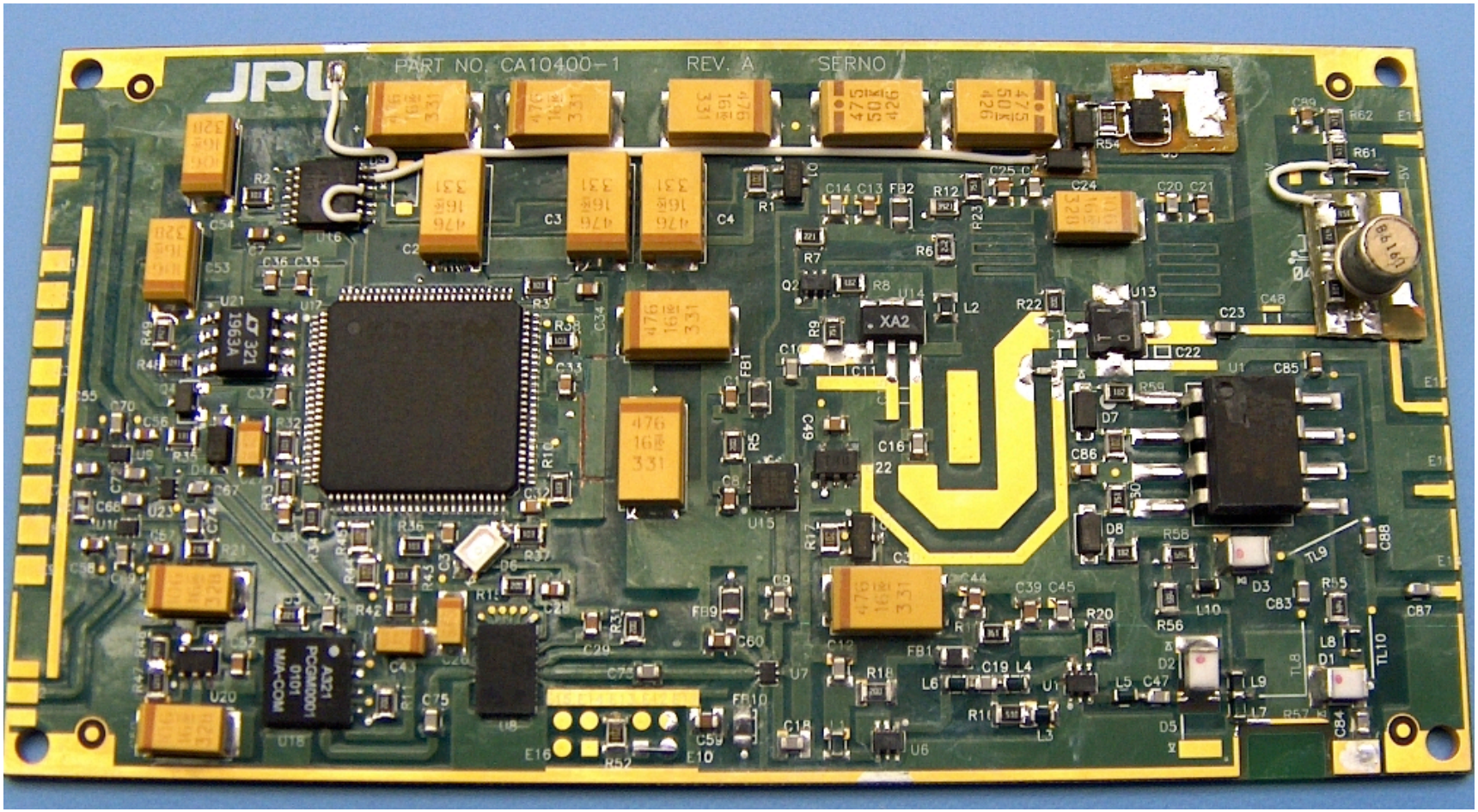

T/R MODULE AUTOMATIC TEST STATION

Efficiency Calculations for Power Amp & Module

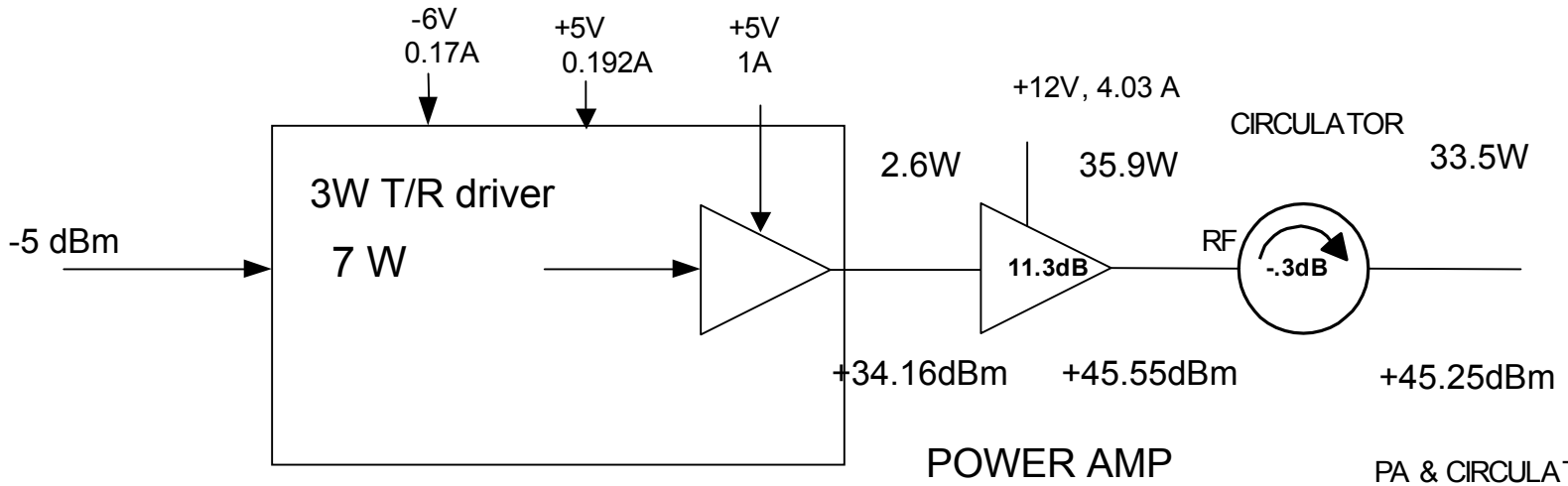

POWER AMP
Drain Efficiency
= 35.9/48.36x100=74.2%

PA & CIRCULATOR EFF
= 33.5/48.36x100=69.2%

Power Added Efficiency (PAE)
= 33.3/48.36x100=68.8%

T/R MODULE EFFICIENCY
= 33.5/(48.36+7) x100=60.5%

Size and Mass Reduction

TOP SIDE

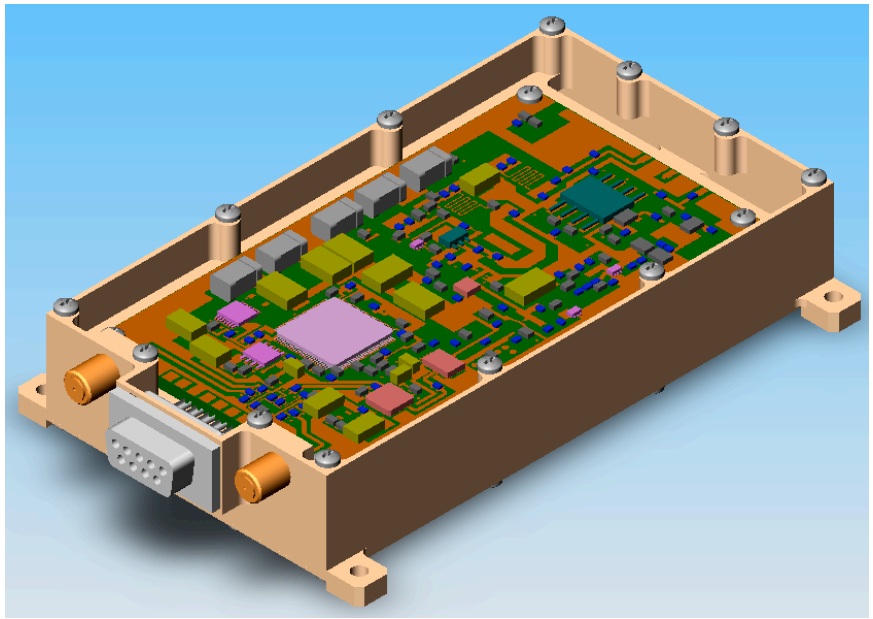

BOTTOM SIDE

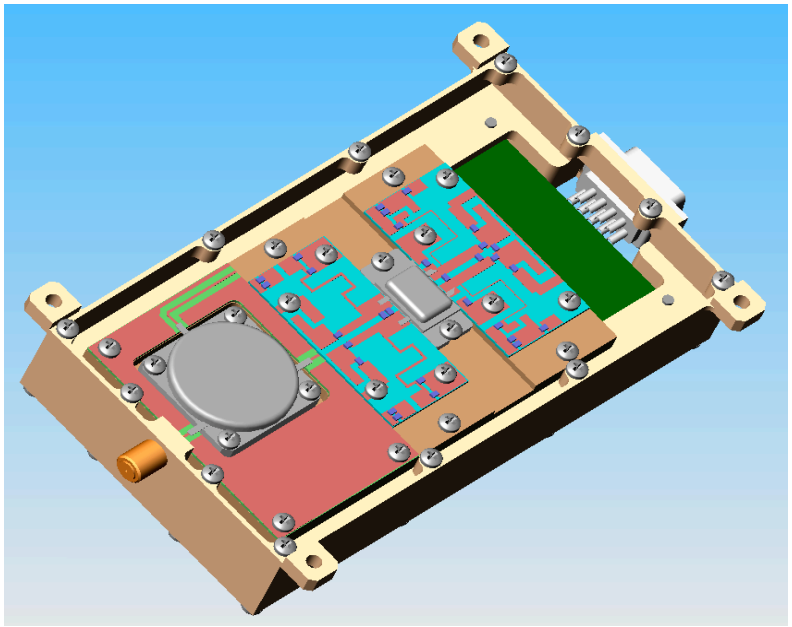

175 g

4.7” x 2.6” x 0.94”

T/R Module Performance vs. Goals

Parameter	Goal	Measured (30W T/R)	Measured (70W T/R)
Center Frequency	1.25 GHz	1.24 GHz	1.24 GHz
1dB Bandwidth	80 MHz	130 MHz	50 MHz
Peak transmit power	30 Watts	33.5 Watts	45 Watts
Efficiency	70%	74% drain eff 69% PAE 60% module eff	69% drain eff 65% PAE 58% module eff
Max duty cycle	10%	>10%	>10%
Transmit Gain	48 dB	50 dB	51 dB
Receive Gain	23 dB	23 dB	23 dB
Receive Noise Figure	<2.5dB	2.8 dB	2.8 dB
Phase Shifter	6-bit	6-bit	6-bit
Rx Third Order Intercept (Input)	>-19 dBm	-15 dBm	-15 dBm
Harmonics	-20 dBc	-40 dBc	-40 dBc
Spurious signals	-60 dBc	-60 dBc	-60 dBc
Input/Output VSWR	< 1.5:1	1.3:1	1.3:1
T/R Module Mass	100 g	175 g (projected)	175 g (projected)
T/R Module Size	2.5” x 1.5” x 0.5”	4.7” x 2.6” x 0.94”	4.7” x 2.6” x 0.94”

Summary

- Demonstrated a 36W L-band Class-A/B PA with 69% PAE
- Demonstrated a 74W L-band Class-E/F PA with 67% PAE
- Developed a 3W T/R Module Driver
- Integrated the Class-A/B PA with the 3W T/R driver and demonstrated 33W with an overall module efficiency of 60%.
- Integrated the Class-E/F PA with the 3W T/R driver and demonstrated 45W with an overall module efficiency of 58%.
- Initiated development of a 5W driver amplifier for the 70W PA to increase power and efficiency of the second module.
- A lower mass T/R module is in development.