QORTEK
Power Technology

Multiband Reconfigurable Synthetic Aperture Radar Antenna

Presented at the NASA ESTO Conference,

Palo Alto CA, 22 June 2004

By H. Paul Shuch, Ph.D.

Chief Technologist, QorTek, Inc.

Initial Ribbon-on-Glass Approach

PENNSTATE

First Reconfigurable Antenna Test Vehicles

Three ribbon wire frame antenna test vehicles completed

Two 2×2 antennas (two sizes, 11 tunable elements each)

One 3×2 antenna (16 tunable elements)

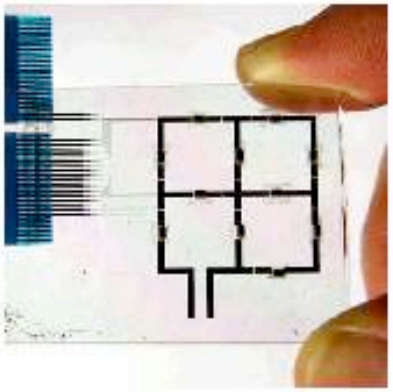

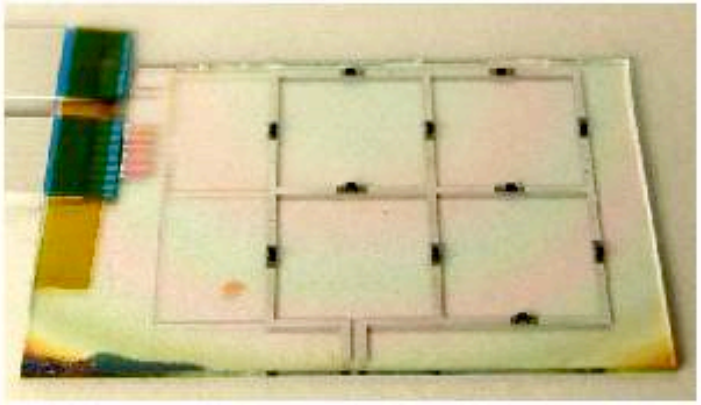

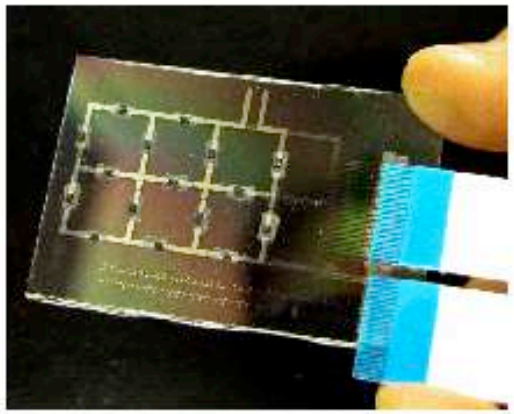

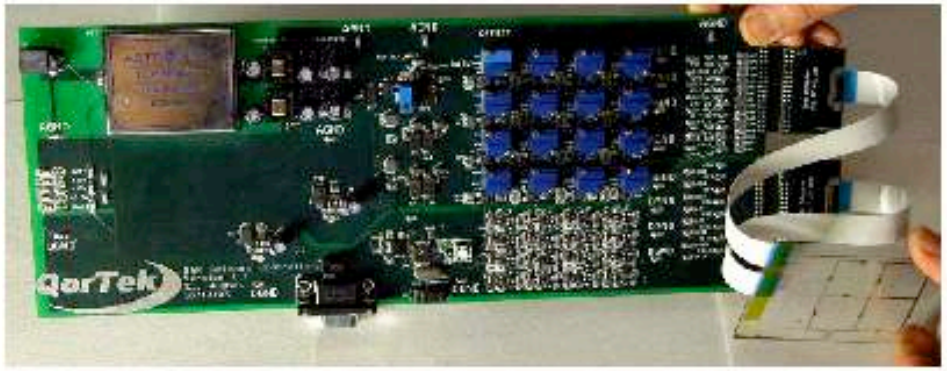

Proprietary to QorTek

A Fresh Approach

- Microstrip Patch derived
- Electrostatically Tunable and Steerable
- Lightweight, Flexible
- Low Cost
- Scalable, L-Band through Ka Band
- Durable in Harsh Environments
- Repeatable in Performance

Proprietary to QorTek

Microstrip Basics

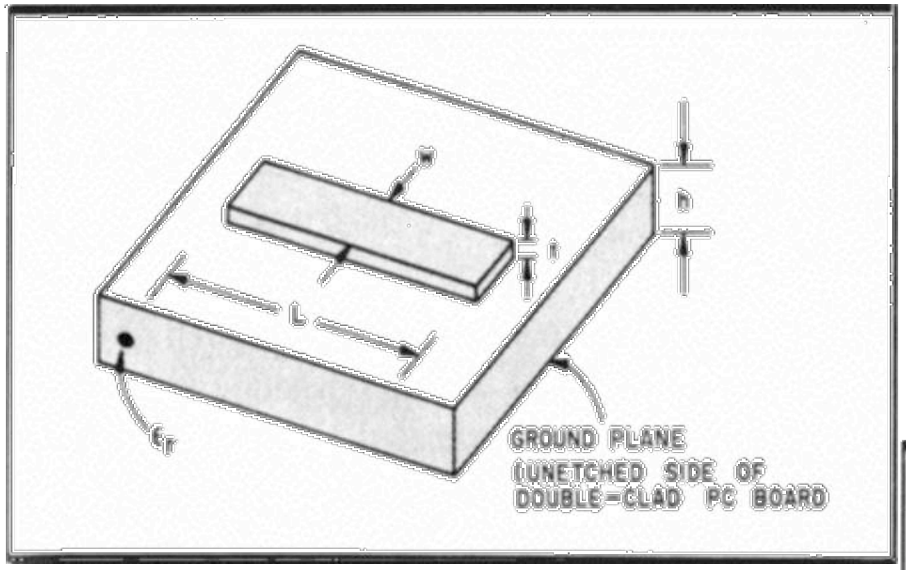

$$Z_0 = \sqrt{L/C}$$

$$v = \frac{1}{\sqrt{LC}}$$

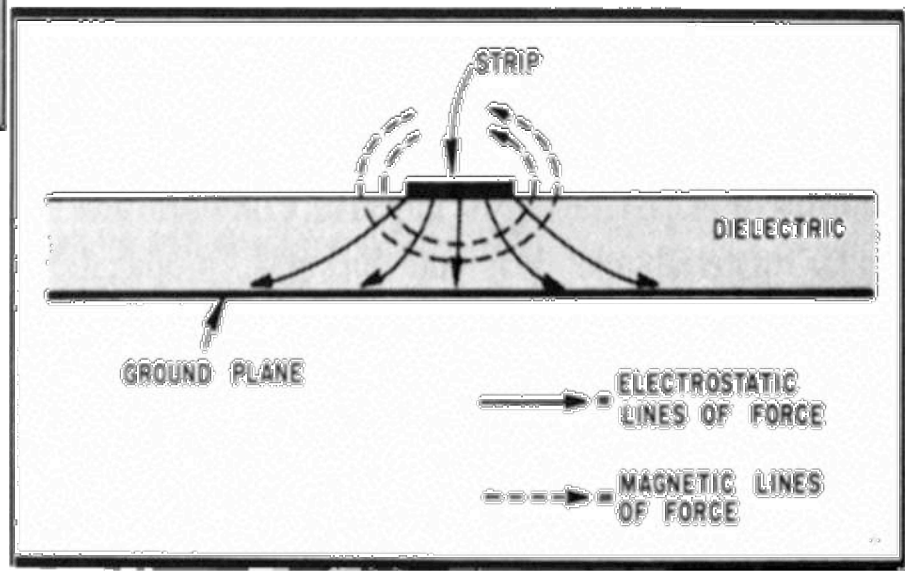

Proprietary to QorTek

Patch Antenna Basics

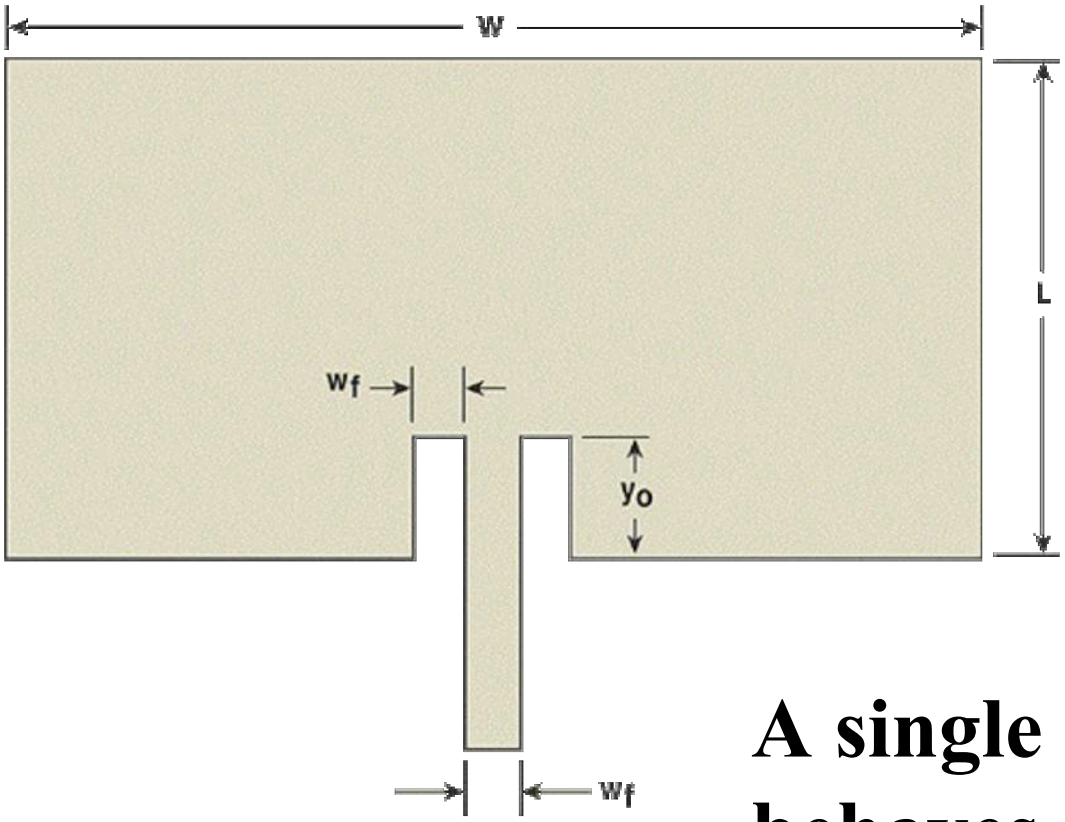

A single Patch Element behaves essentially like a Reflector-Backed Dipole

Proprietary to QorTek

Aspect Ratio

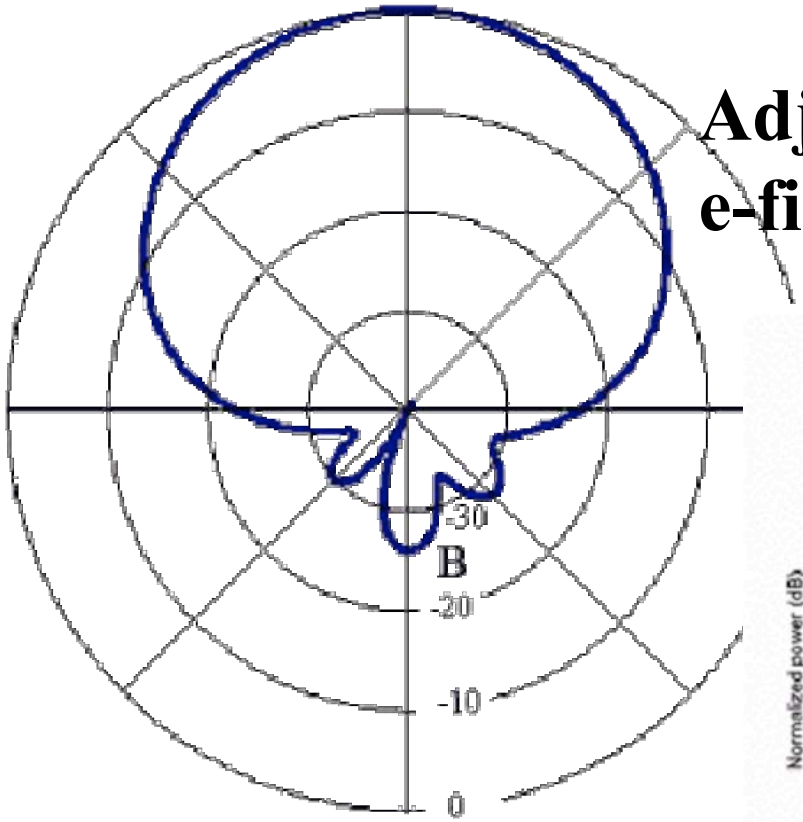

Adjusting W/L Ratio establishes e-field and h-field symmetry

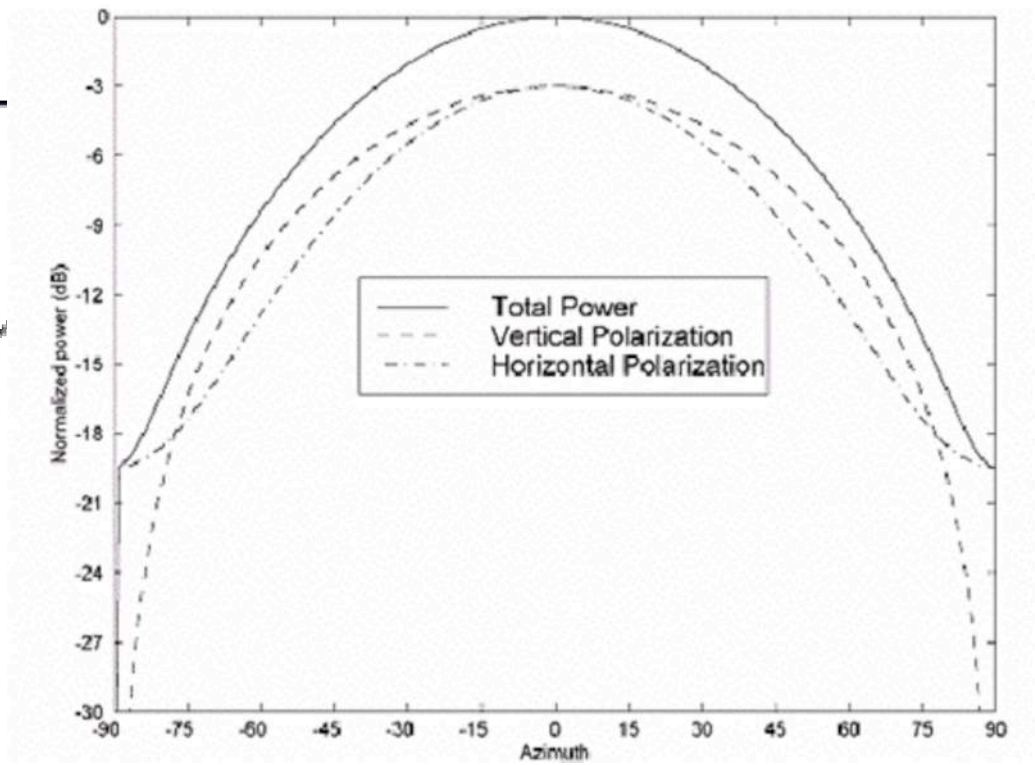

Proprietary to QorTek

Patch Antenna Tradeoffs

Advantages:

- Inexpensive
- Low Profile
- Good Pattern
- Easy to Match

Disadvantages:

- Narrow-Band
- Not easily tunable
- Dielectric Losses
- Physically Large

However…

Proprietary to QorTek

eSTAAr^{tm} Design Concept

Microstrip or Dielectric Patch Resonance

$$f_o \simeq c / [2L (\varepsilon_r^{1/2})]$$

where f_o = resonant frequency in Hz

c = the speed of light = $3 * 10^8$ m/s

L = the physical length (in meters) of the patch element

and ε_r = the permittivity or dielectric constant of the substrate, relative to free space.

Thus, the operating frequency of a patch antenna element varies inversely with the square root of the relative permittivity of its dielectric material.

(Vary ε_r and f_o varies!)

Proprietary to QorTek

Ferrotunable Materials

BST (60/40) on Cu

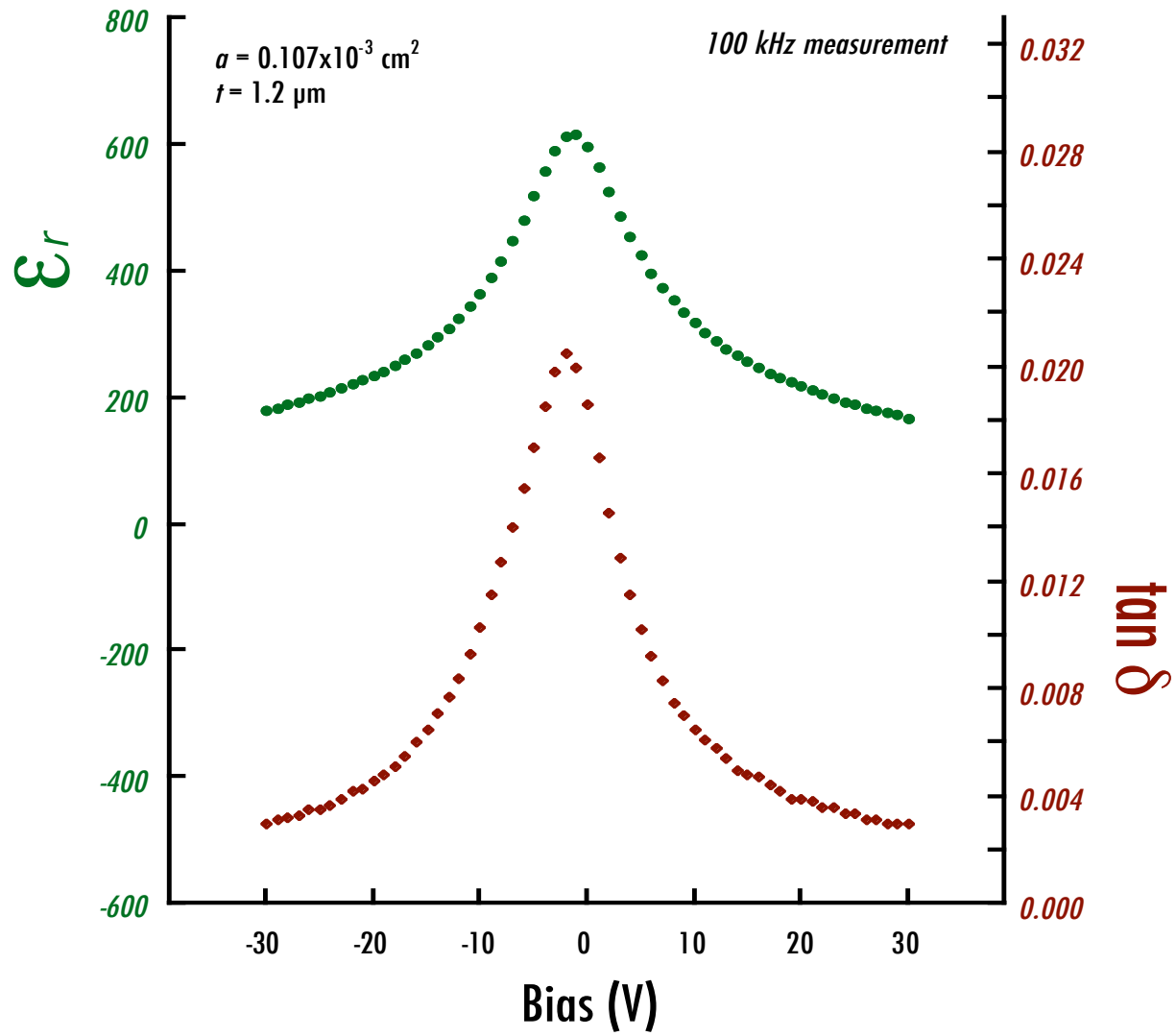

Representative Dynamic, Electrostatically Tunable Substrate Materials

- $Bi_{1.5}Zn_{1.0}Nb_{1.5}O_7$
- $Bi_2Zn_{2/3}Nb_{4/3}O_7$
- $Bi_{1.5}Zn_{0.5}Nb_{1.5}O_{6.5}$
- $Ba_{0.6}Sr_{0.4}TiO_3$

Proprietary to QorTek

Quadrant Steering Concept

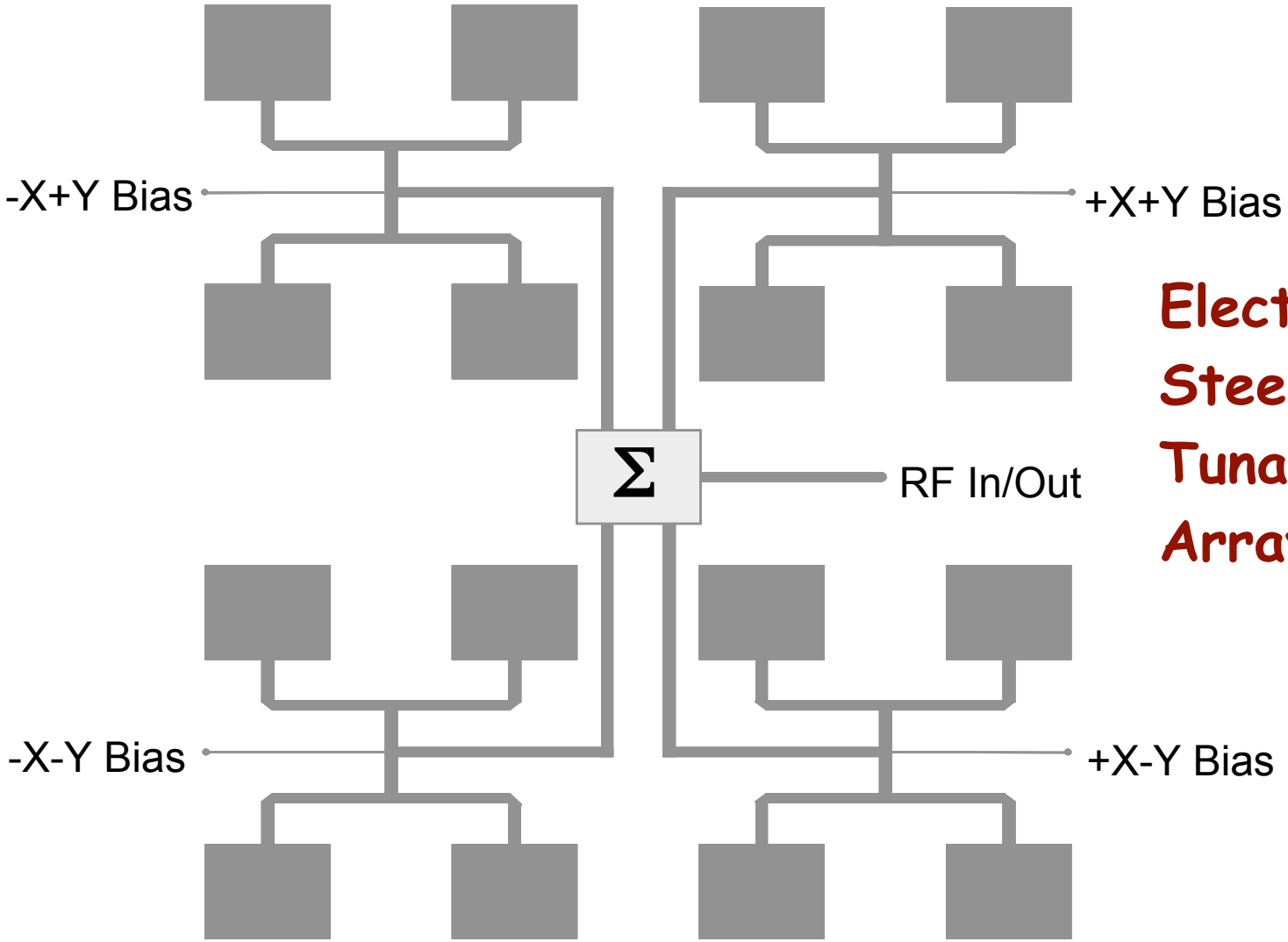

Electrostatically Steerable and Tunable Antenna Array

(scalable - only four elements shown per quadrant)

Proprietary to QorTek

Analog Tuning/Steering Circuitry

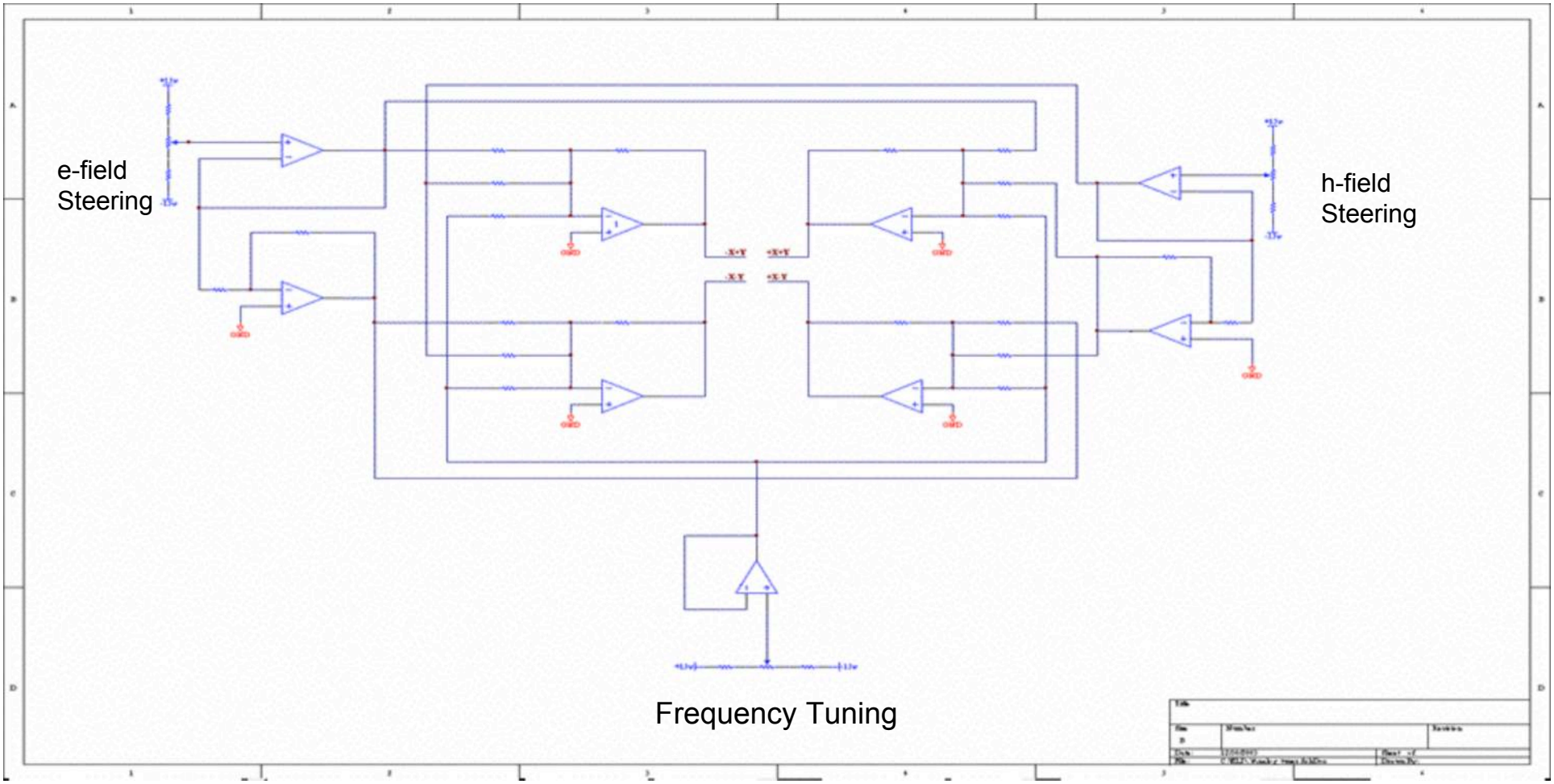

Proprietary to QorTek

Analog Test Fixture

Manually controls E-Field and H-Field steering and frequency

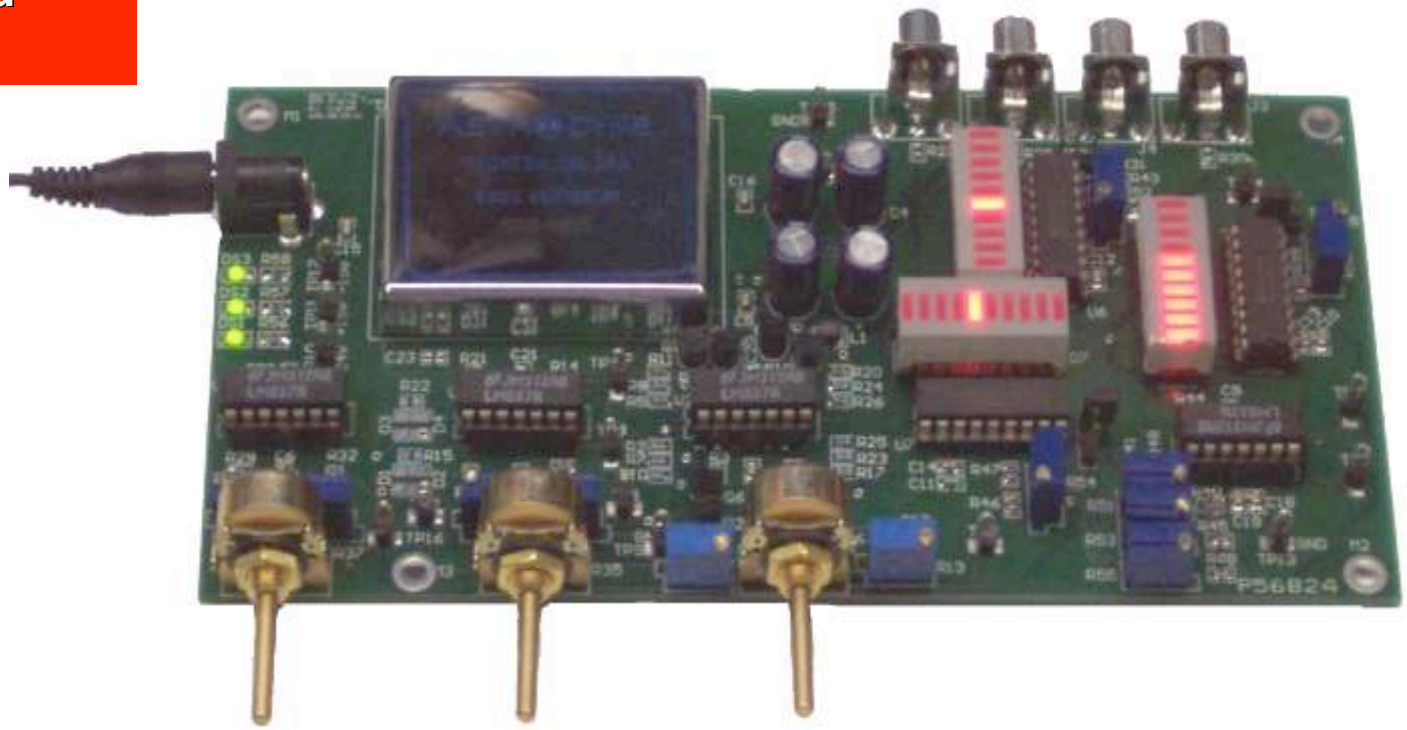

Controls 16-patch test array

Proprietary to QorTek

Key eSTAAr^{tm} Design Features

- Active Substrate
- Electrostatic Tuning
- Locally Tunable
- Minimizes discrete components
- Eliminates active devices
- No switching in the RF path
- Antenna elements and beam forming circuitry all share a common substrate

Proprietary to QorTek

Mission-Specific Digital Steering

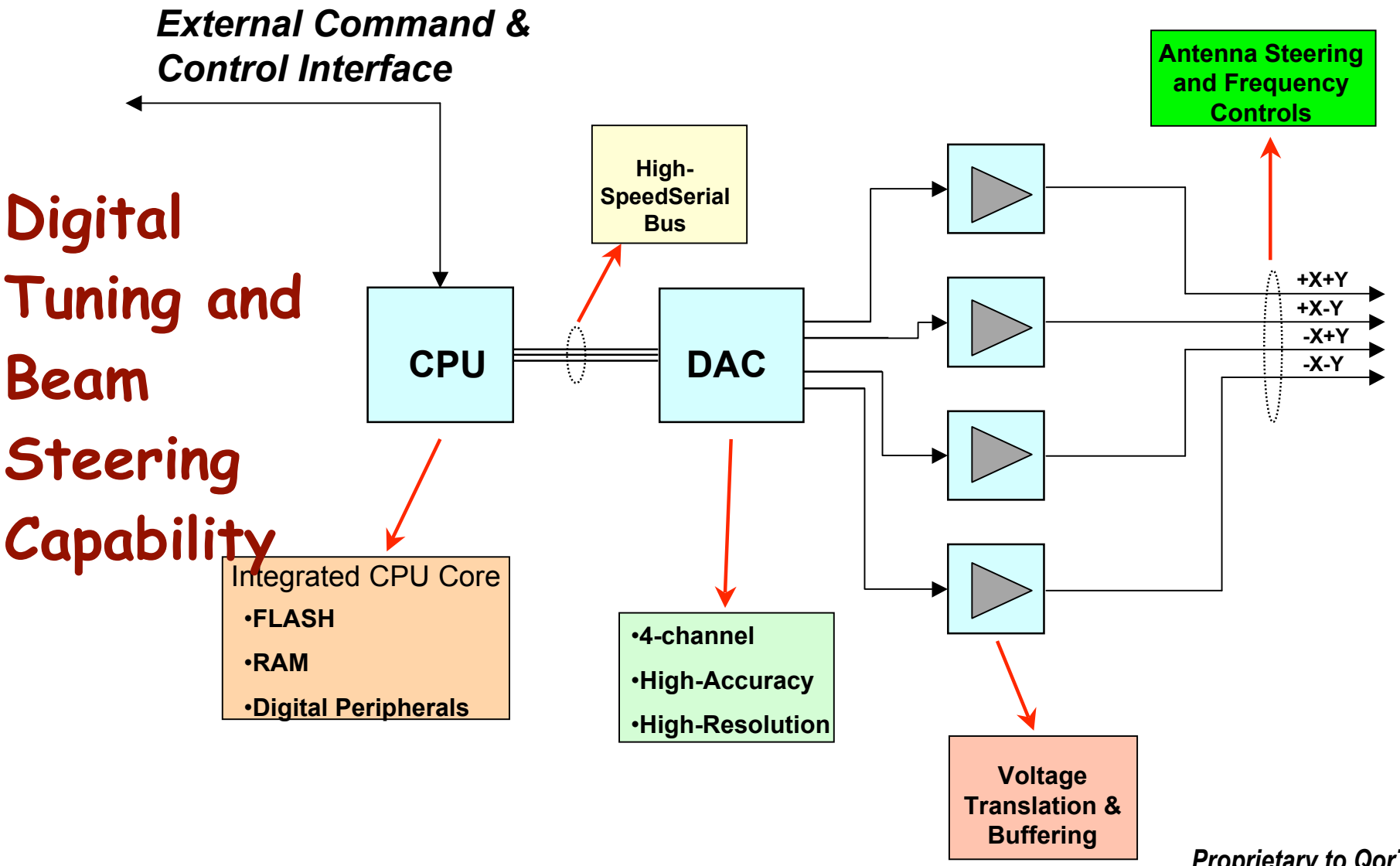

Proprietary to QorTek

Overcoming Dielectric Losses

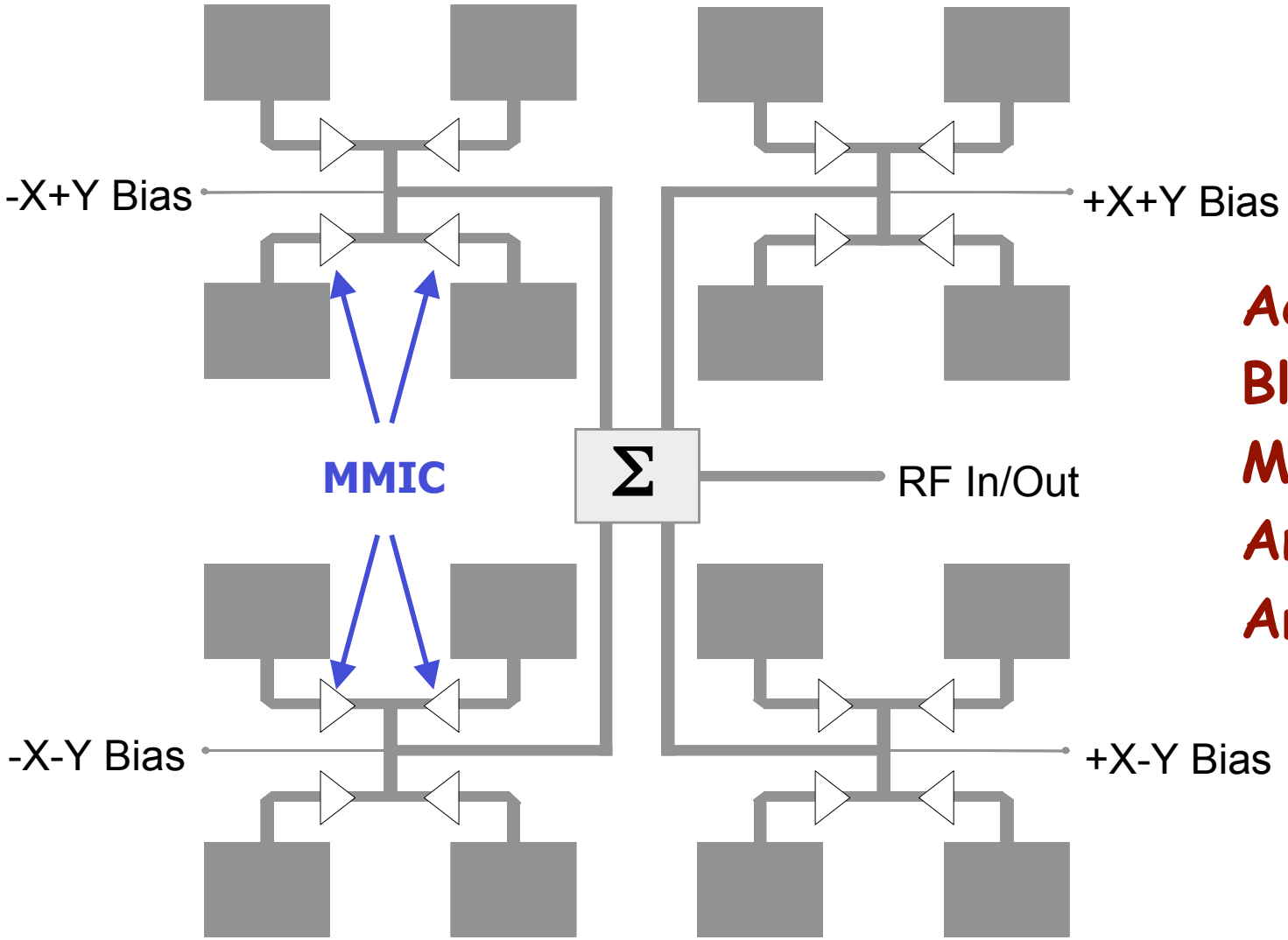

Active Gain Blocks On Microstrip Antenna Array

T or R, your choice (but not both!)

MMIC - Monolithic Microwave Integrated Circuit Amplifier

Proprietary to QorTek

Bidirectional FET Amplifier

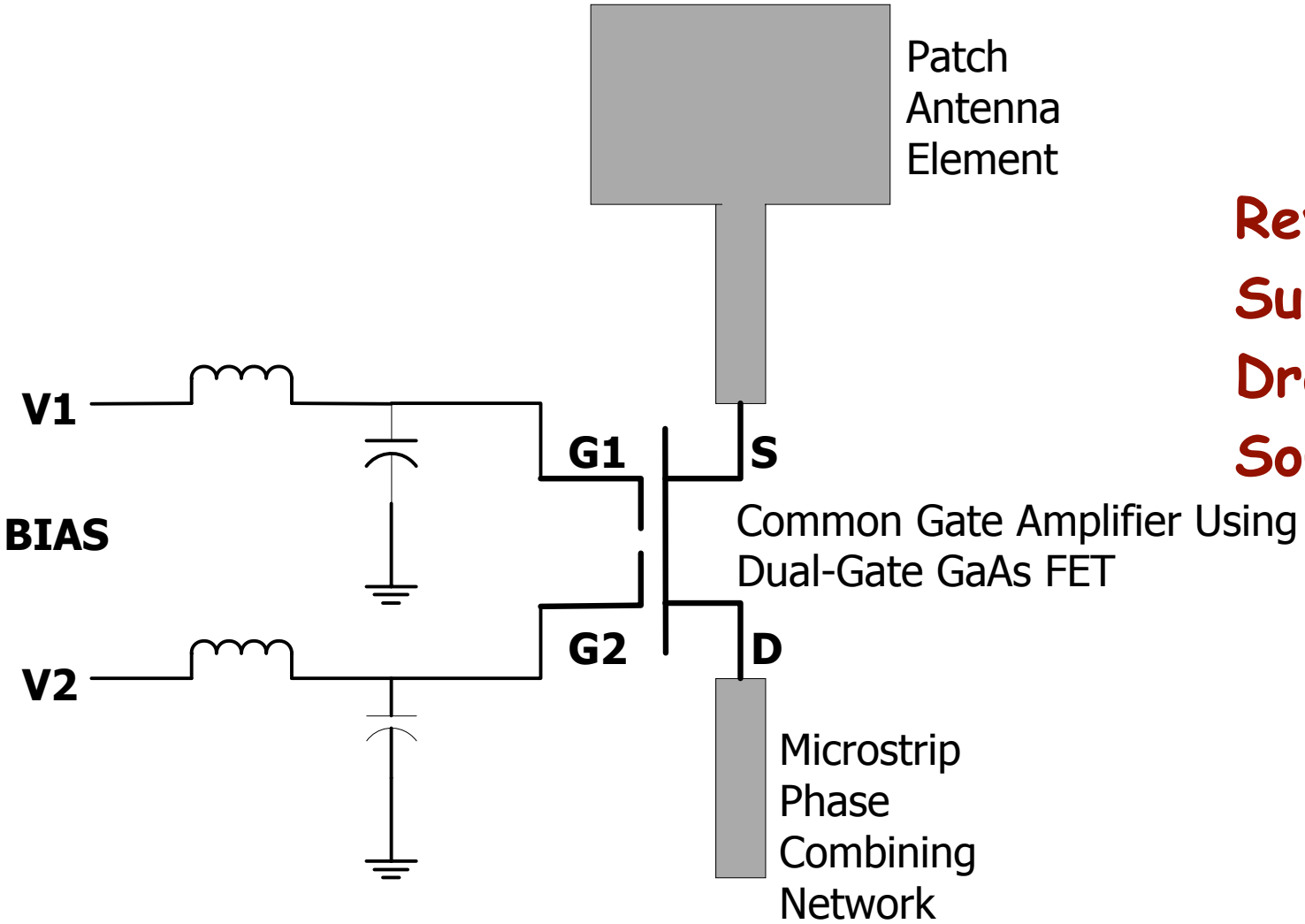

Reversing Bias Substitutes Drain for Source

T or R, your choice (by varying bias!)

Proprietary to QorTek

Transistor Matrix Architecture

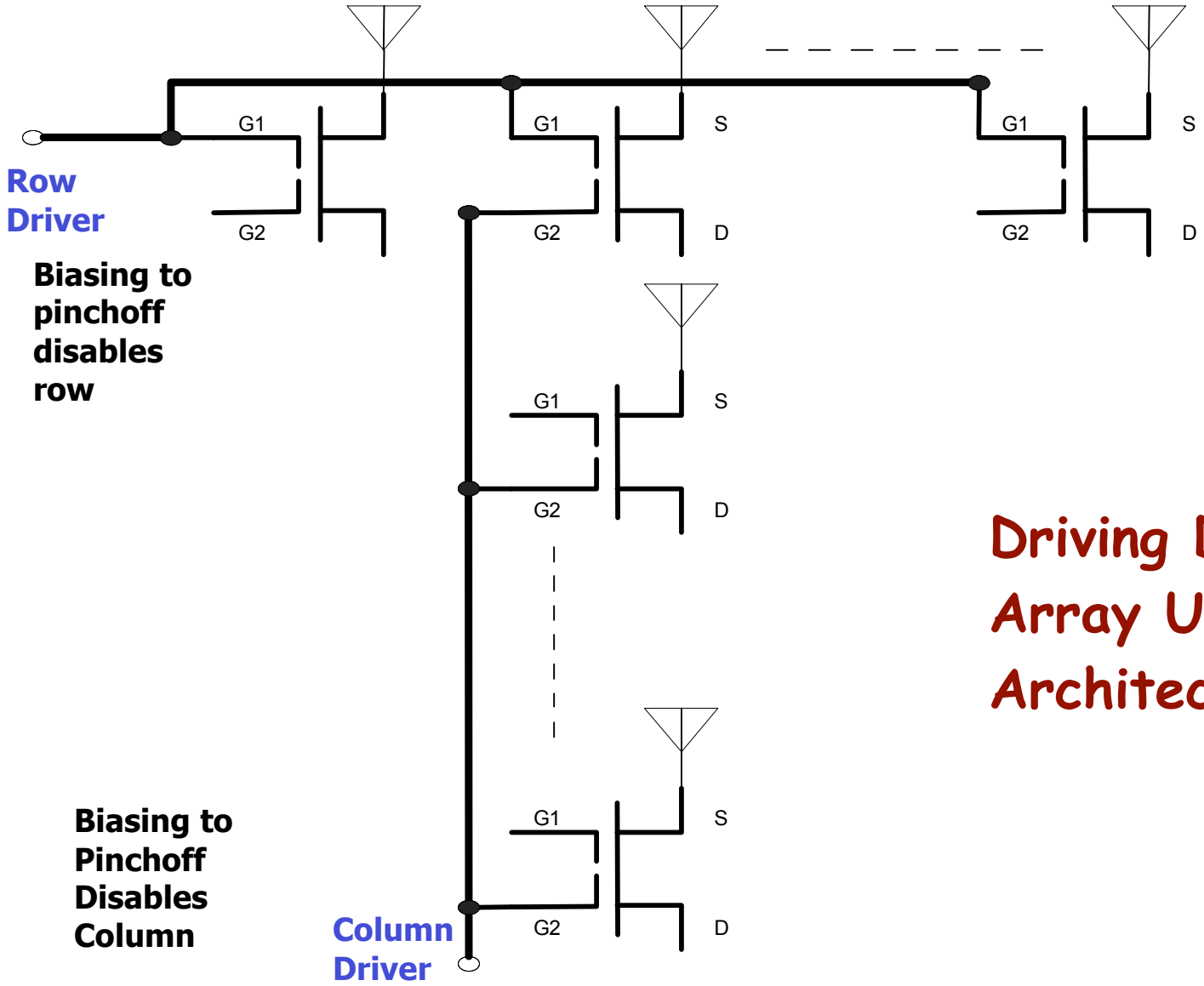

Driving Dual-Gate Array Using Matrix Architecture

Proprietary to QorTek

Matrix Driver Circuitry

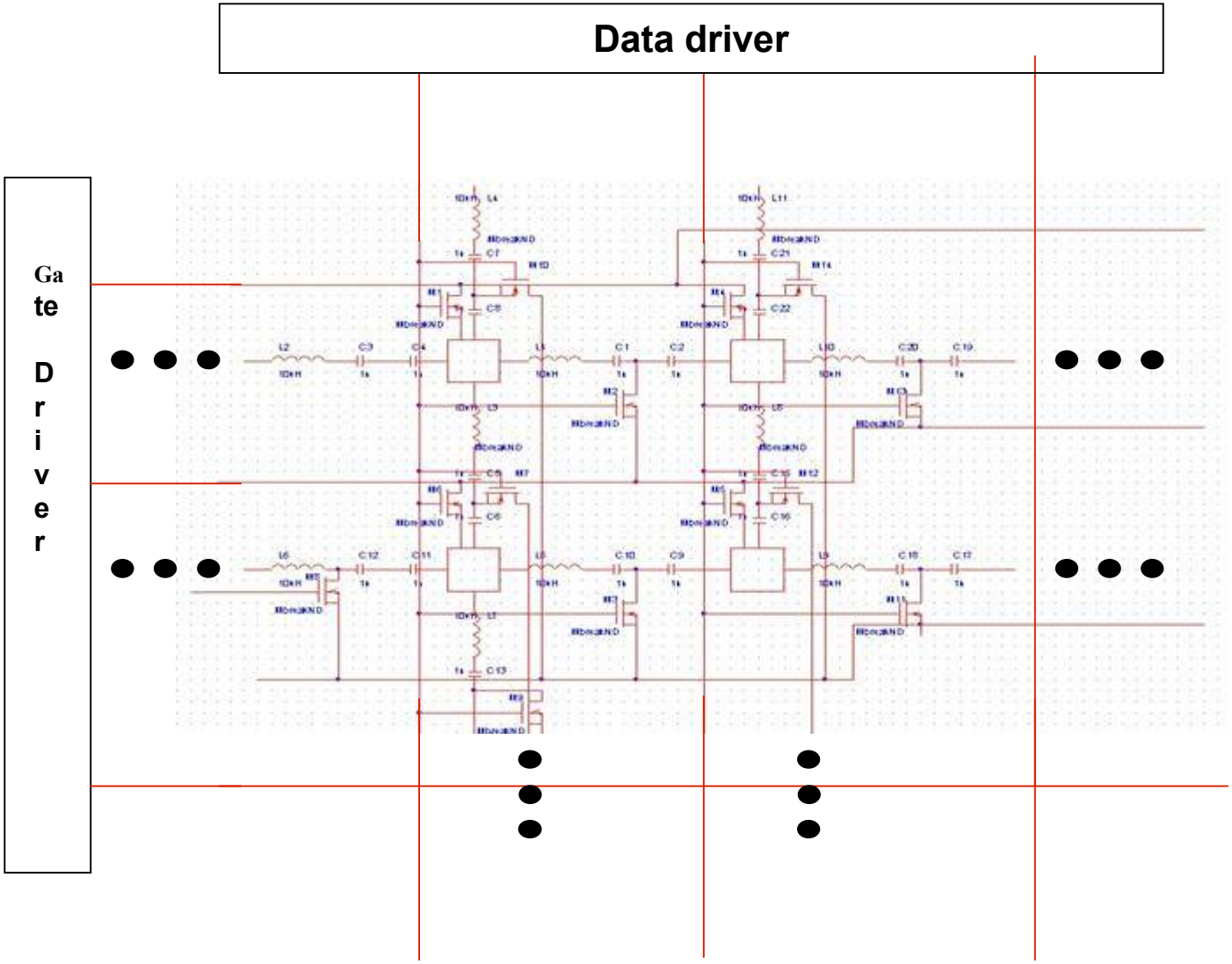

(Think Laptop Computer Display)

Proprietary to QorTek

eSTAAr^{tm} Design Advantages

- Phased Array Of Multiple Patch Antennas
- Steerable by either Quadrant or Matrix
- Dynamic, Electrostatically Tunable Substrate
- Adjustable Frequency via Applied DC Potential
- Adjustable Azimuth via Applied DC Potential
- Adjustable Elevation via Applied DC Potential
- Adjustable Beamwidth via Applied DC Potential
- Adaptive Beamforming via Applied DC Potentials

Proprietary to QorTek

Hardware Testing Underway

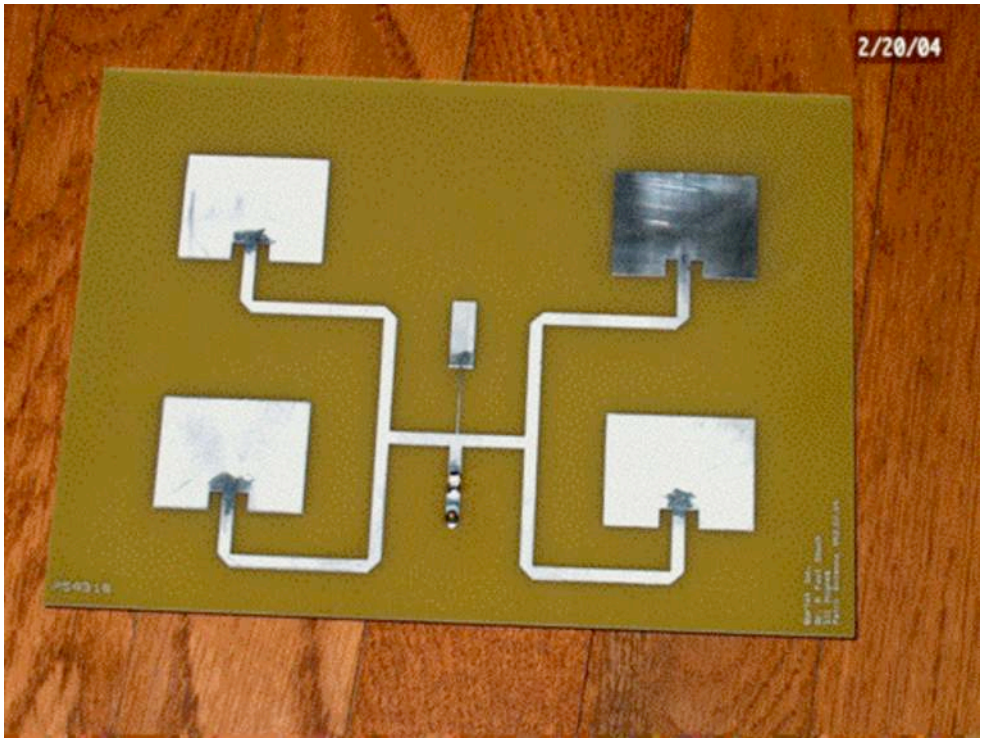

Vert: 5 dB/Div.

- Top, return loss
- Bottom, relative gain

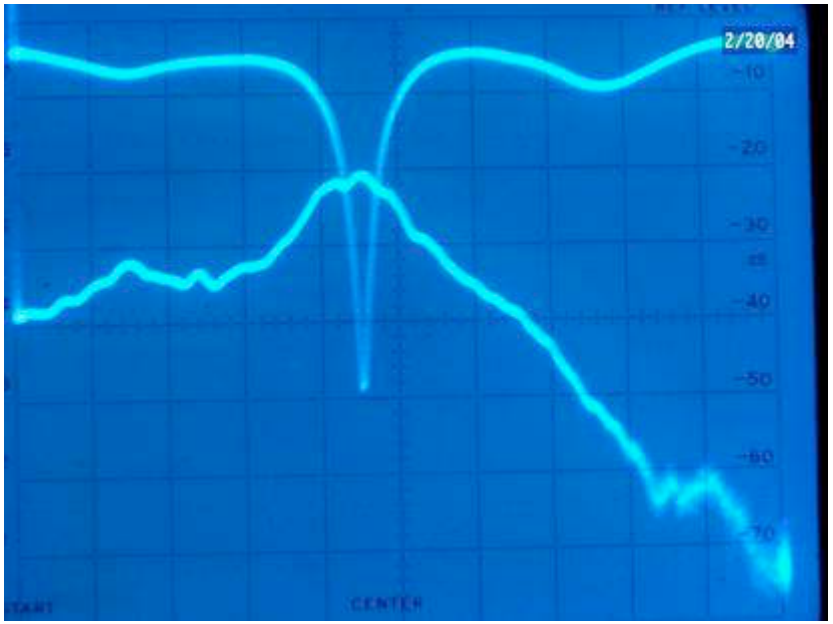

Horiz: frequency, 2 – 3 GHz

Proprietary to QorTek

Demonstrating Resonance

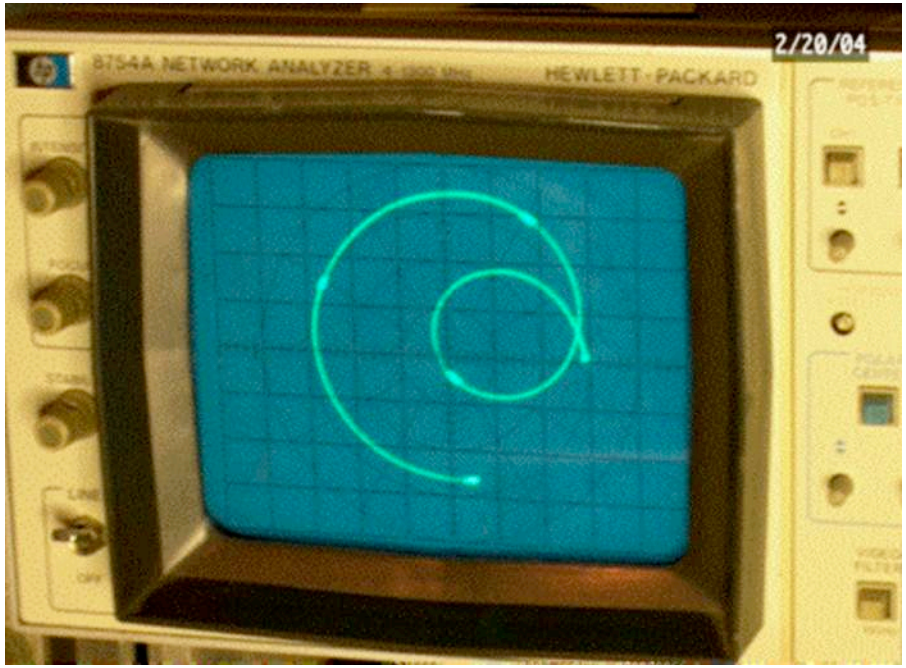

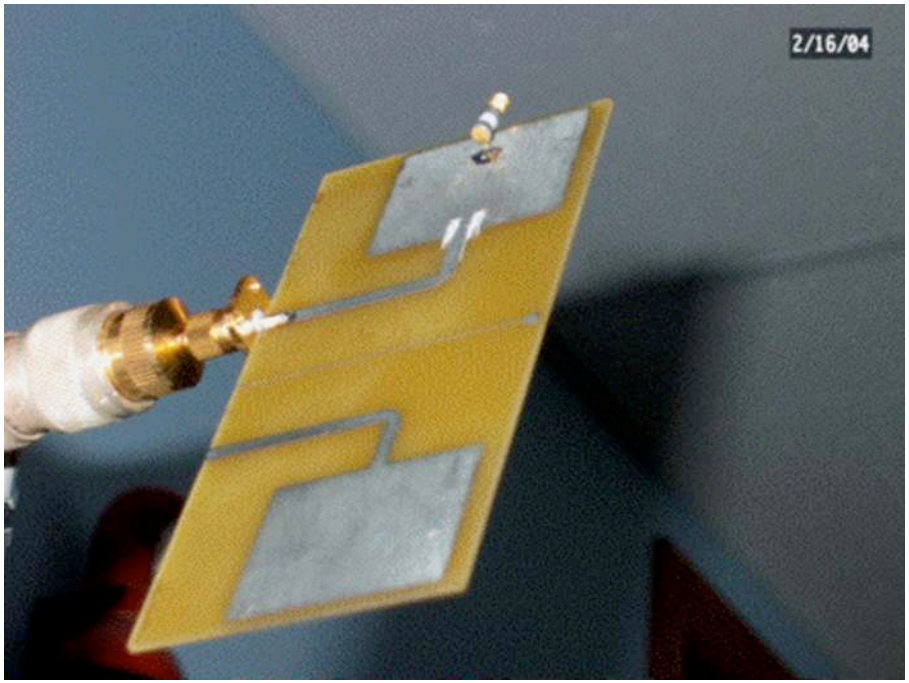

Polar swept refl. coeff.

frequency 2.3 – 2.7 GHz

Proprietary to QorTek

Demonstrating Tunability

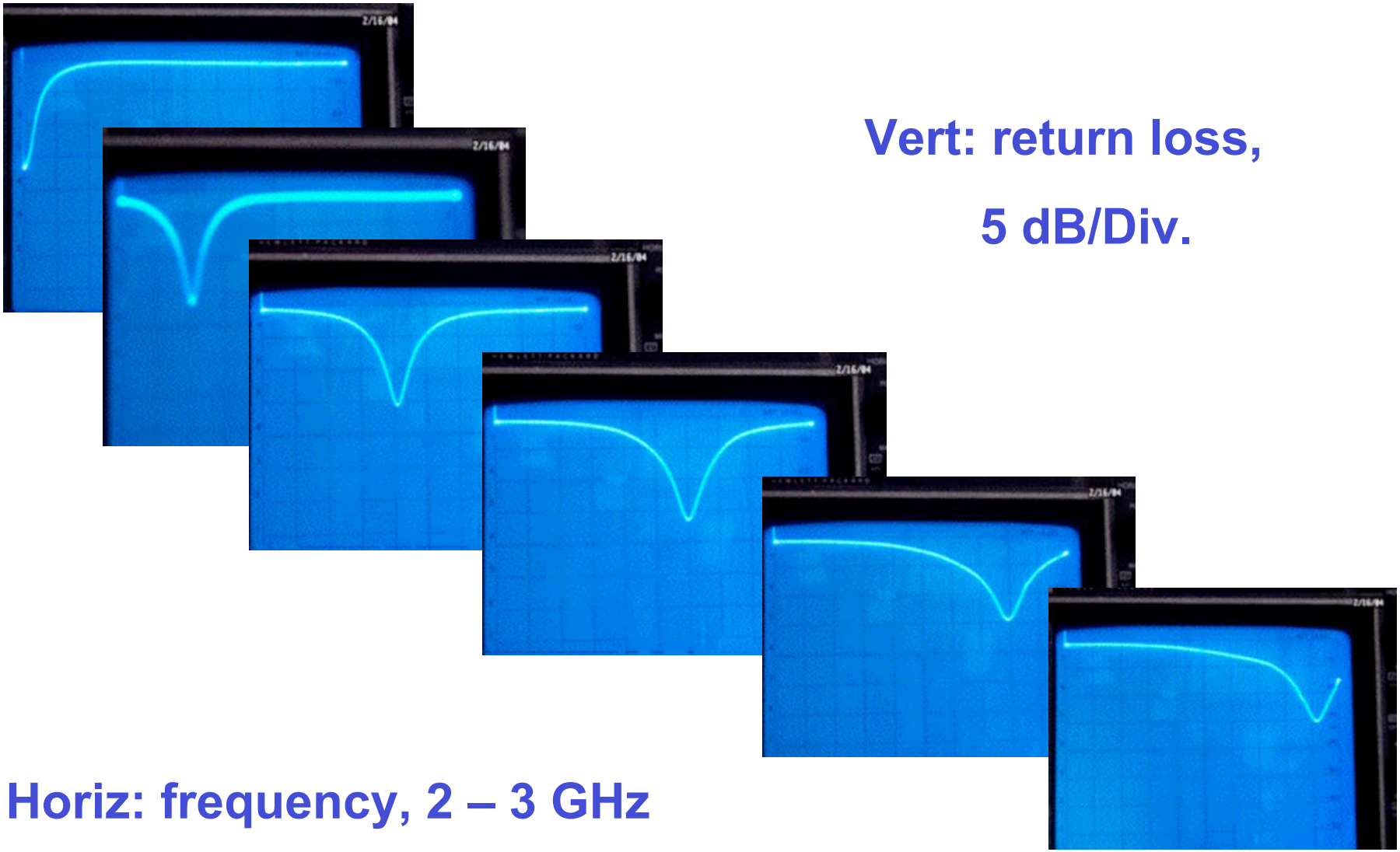

Vert: return loss,

5 dB/Div.

Horiz: frequency, 2 – 3 GHz

Proprietary to QorTek

Varactor Tuning

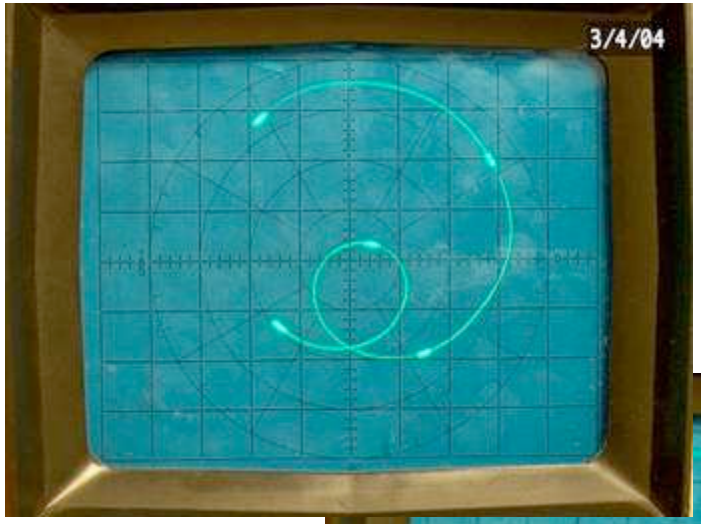

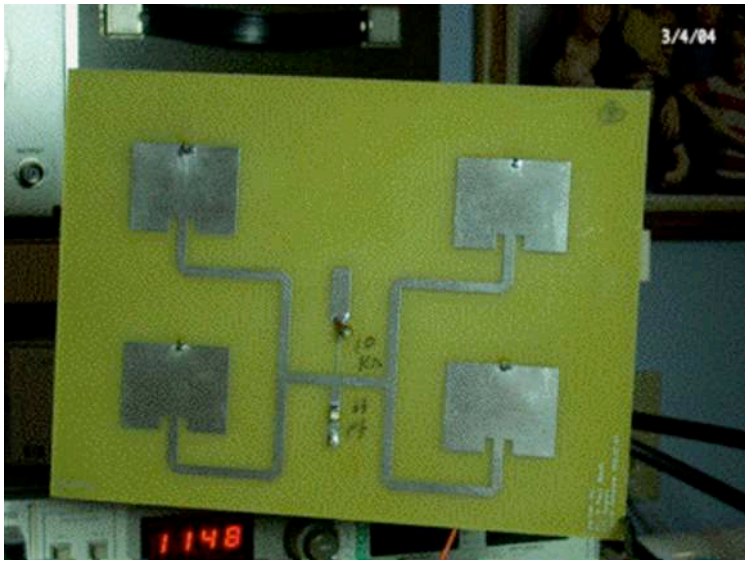

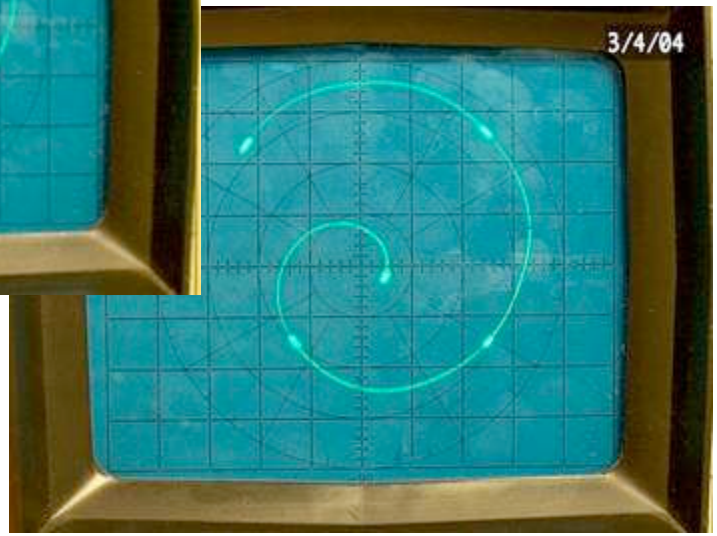

Polar swept refl. coeff.

frequency 2.3 – 2.7 GHz

Proprietary to QorTek

Testing Power Divider

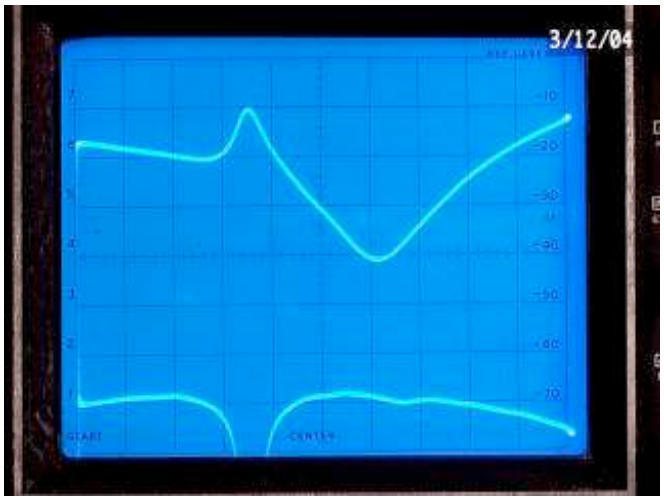

Vert: Top, return loss, 5 dB/Div.

Bottom, insertion loss, 1 dB/Div.

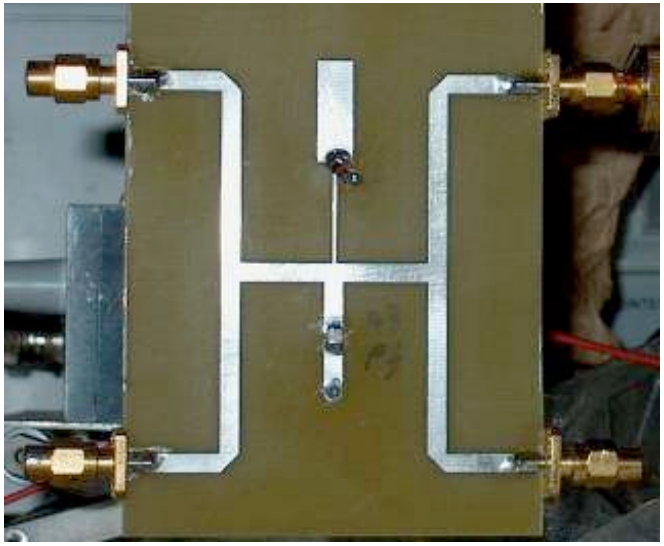

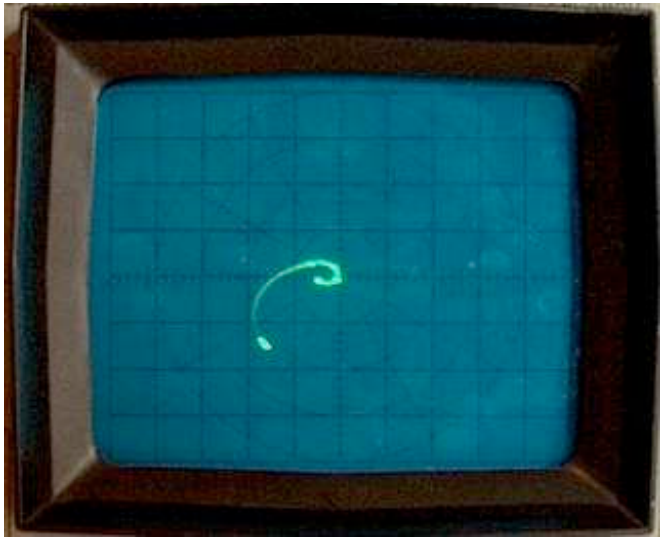

Polar swept refl. coeff.

frequency 2.3 – 2.7 GHz

Proprietary to QorTek

Active Antenna with MMICs

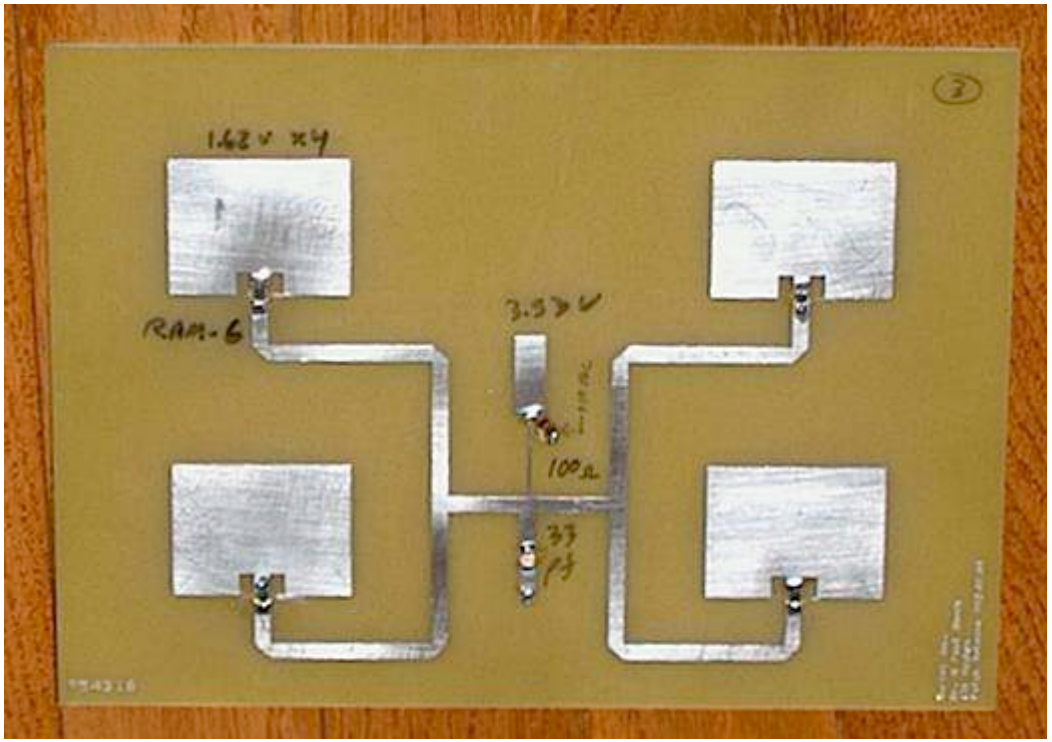

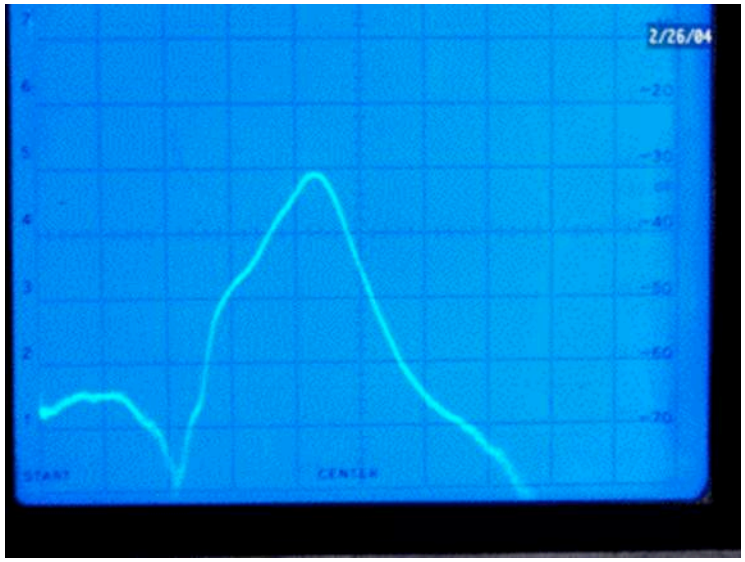

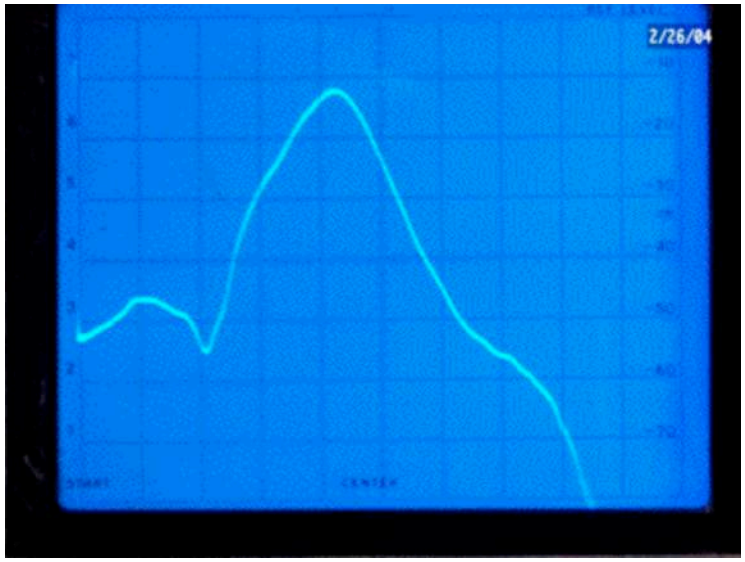

Vert: relative gain, 5 dB/Div.

Horiz: frequency, 2 – 3 GHz

Proprietary to QorTek

16-element array

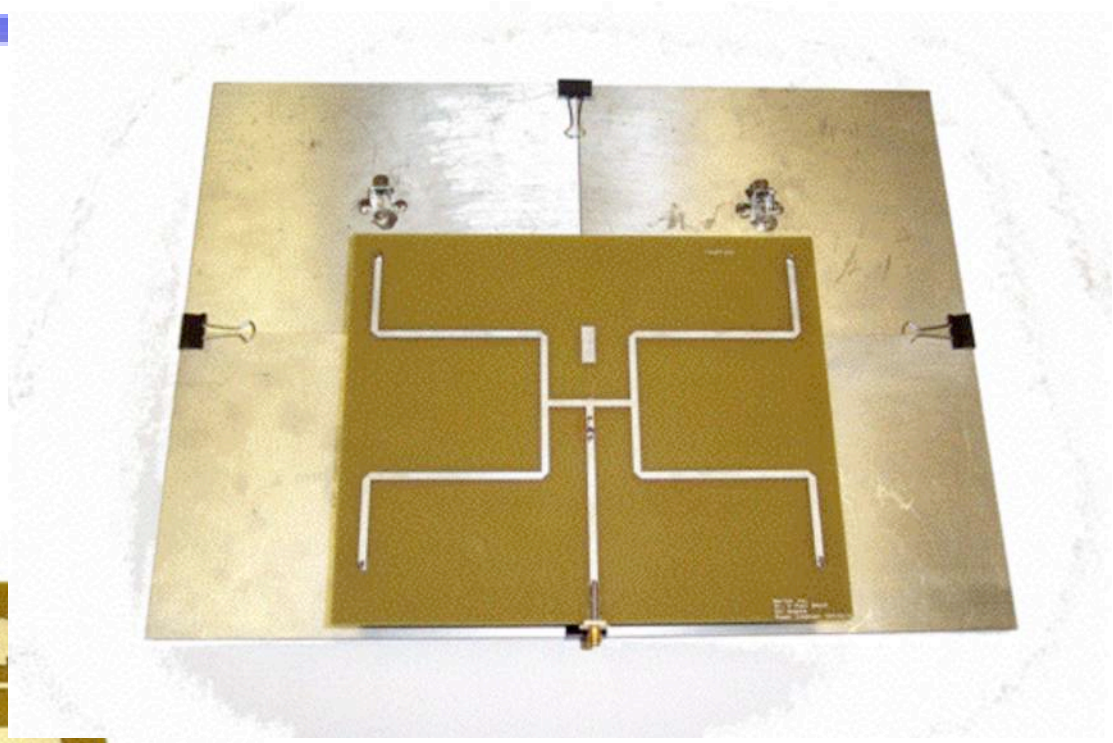

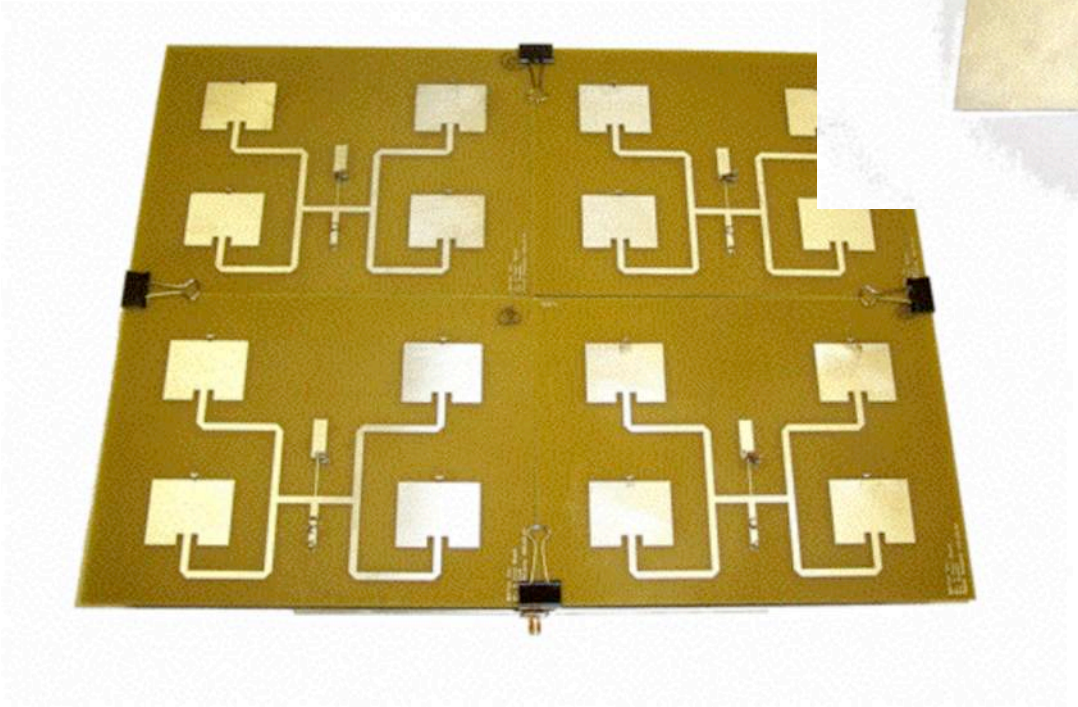

Proprietary to QorTek

Fixed Capacitive Loading

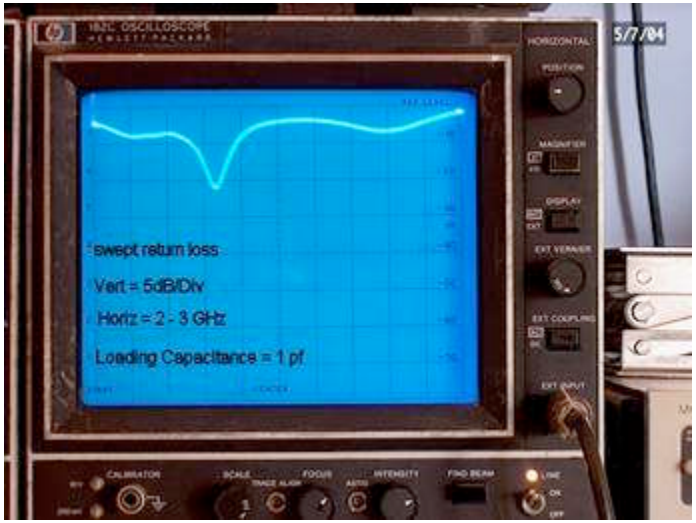

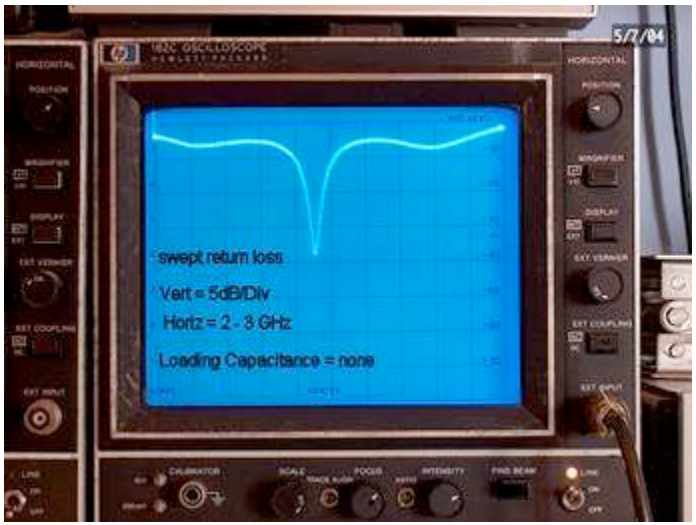

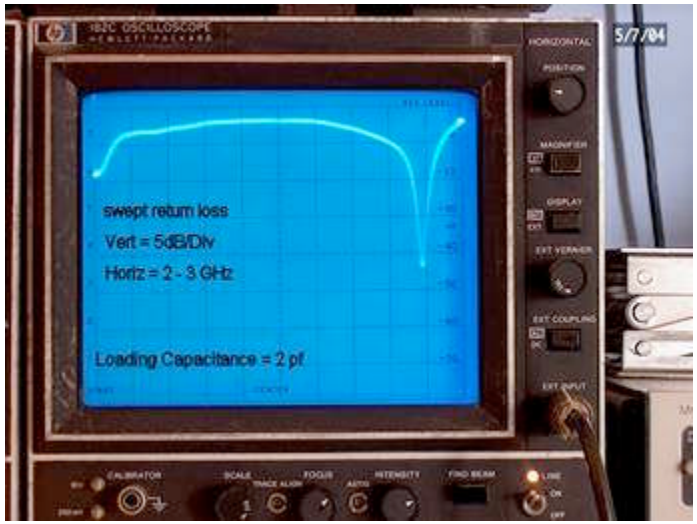

Proprietary to QorTek

256-element array Mockup

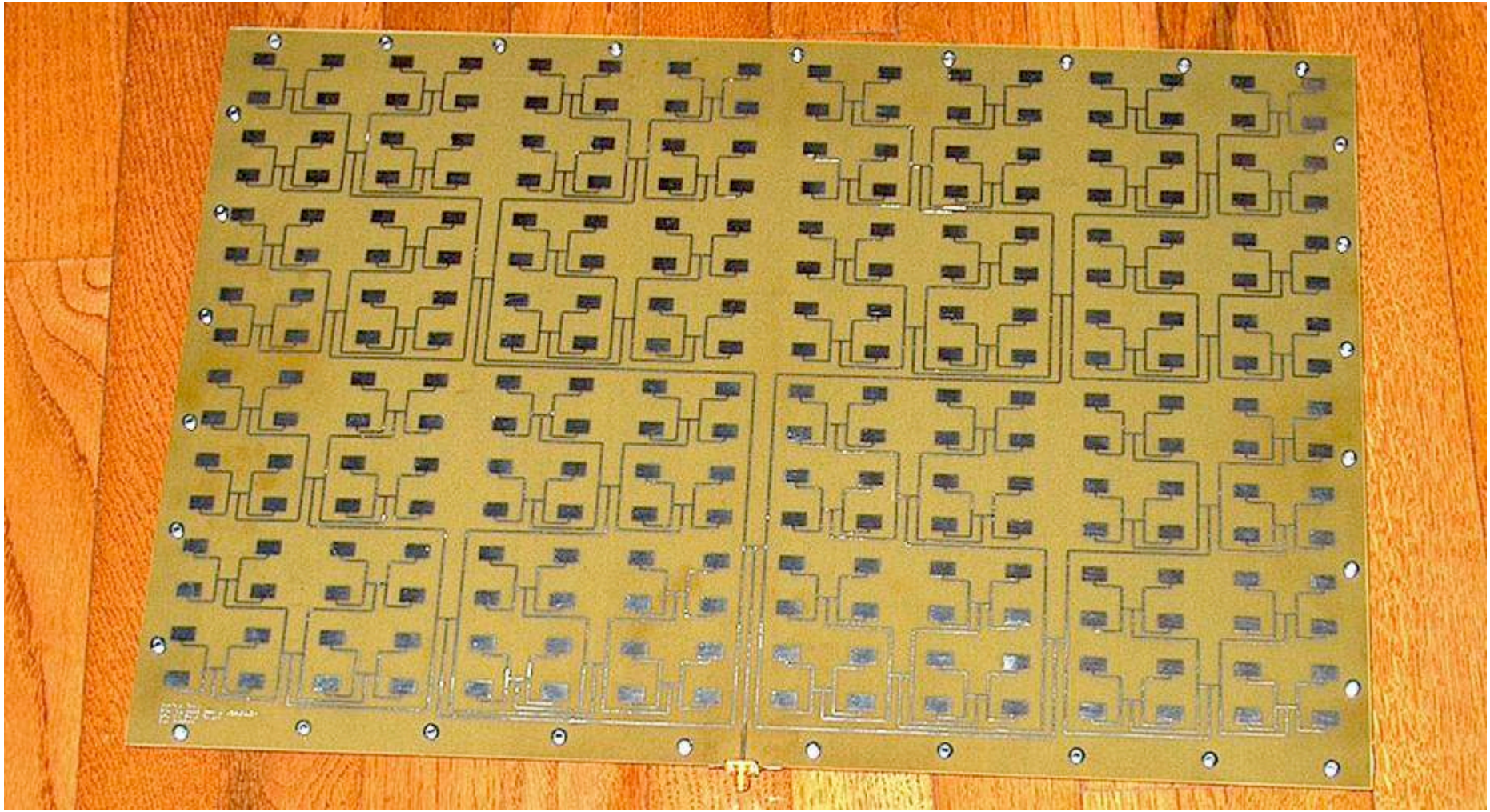

Proprietary to QorTek

Conformal Antenna Test Unit

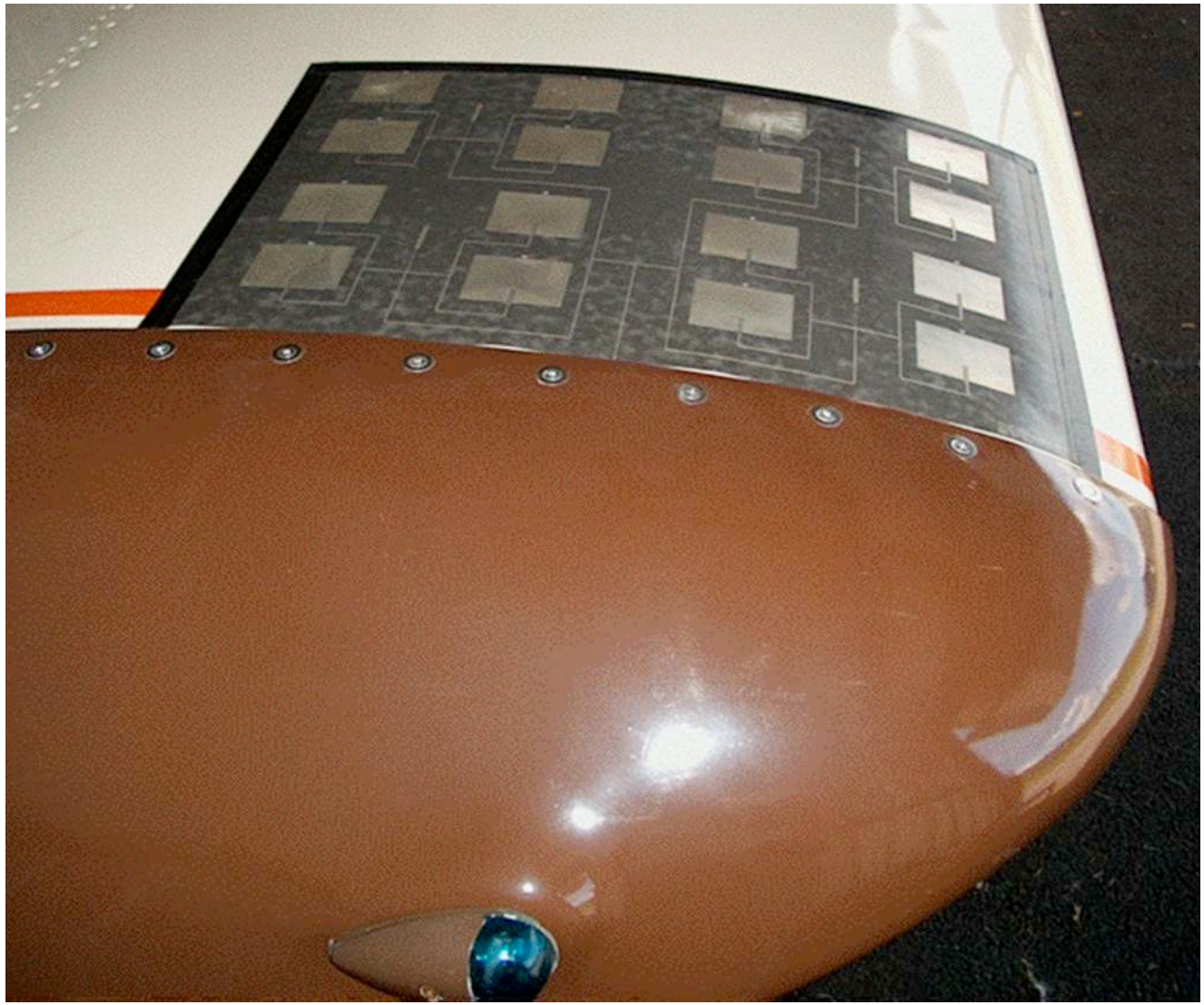

Proprietary to QorTek

Applicable NASA ESTO Missions

- Global Topography Mapping Mission - high resolution, digital topography mapping [L-band SAR]
- Dual Frequency, Multi-Polarization Global Mapping SAR Mission - biomass and soil moisture, and provide high resolution regional-scale measurements [L-/X-band SAR]
- Ocean Phenomenology Mission - low-wind wakes and high-wind mountain waves that form in the atmosphere downwind of rugged

Proprietary to QorTek

Sample Spacecraft Application

Proprietary to QorTek

Other Applications

- Satellite Television
- Mobile wireless networking
- Aerospace Telemetry
- Remote Sensing
- Weather Monitoring
- Air Traffic Control
- Missile Defense
- Electronic Countermeasures
- Command, Control, Communications & Intelligence

Proprietary to QorTek

Anknowledgments

- NASA ESTO contract NAS5-03014
- Ms. Janice Buckner, ESTO technical representative
- Dr. Gareth Knowles, QorTek, PI
- Dr. Susan Trolier-McKinstry, MRI, Pennsylvania State University
- Dr. Jon-Paul Maria, MRS, North Carolina State University

Proprietary to QorTek

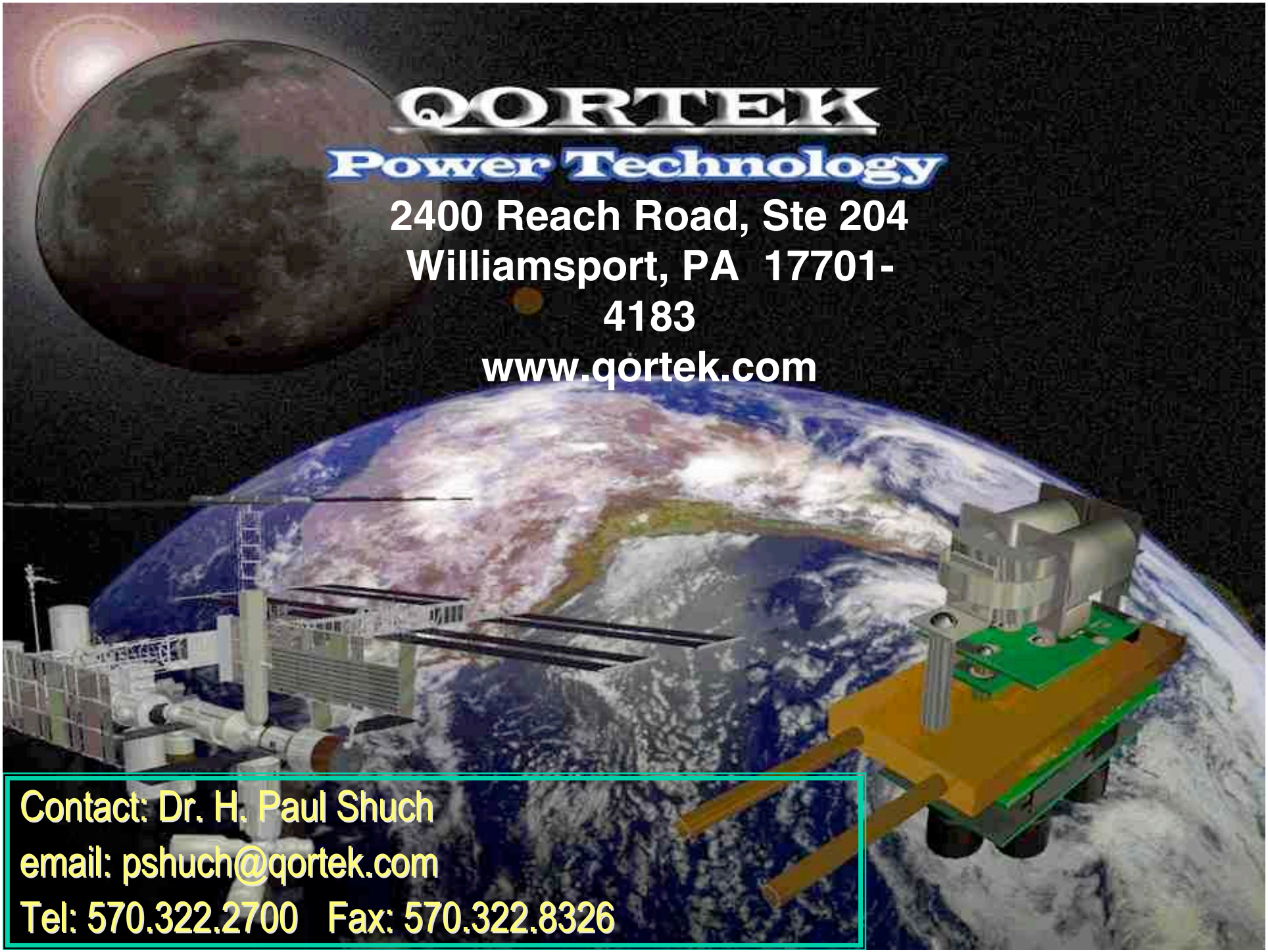

Contact: Dr. H. Paul Shuch
email: pshuch@qortek.com
Tel: 570.322.2700 Fax: 570.322.8326